FORM 2-7046-6 (9-63)

STANDARDS CODE	CIRCUIT AND PACKAGING STANDARD		SYM	DATE	CHANGE NO	TECH APPRO	SYM	DATE	CHANGE NO	TECH APPRO	DEVELOPMENT NO	Q/M
2-7046				[redacted]652	A							
CARD CODE	APPROVAL	DATE										
1719	PHS	[redacted]									5801719	

SHEET 11 OF 17

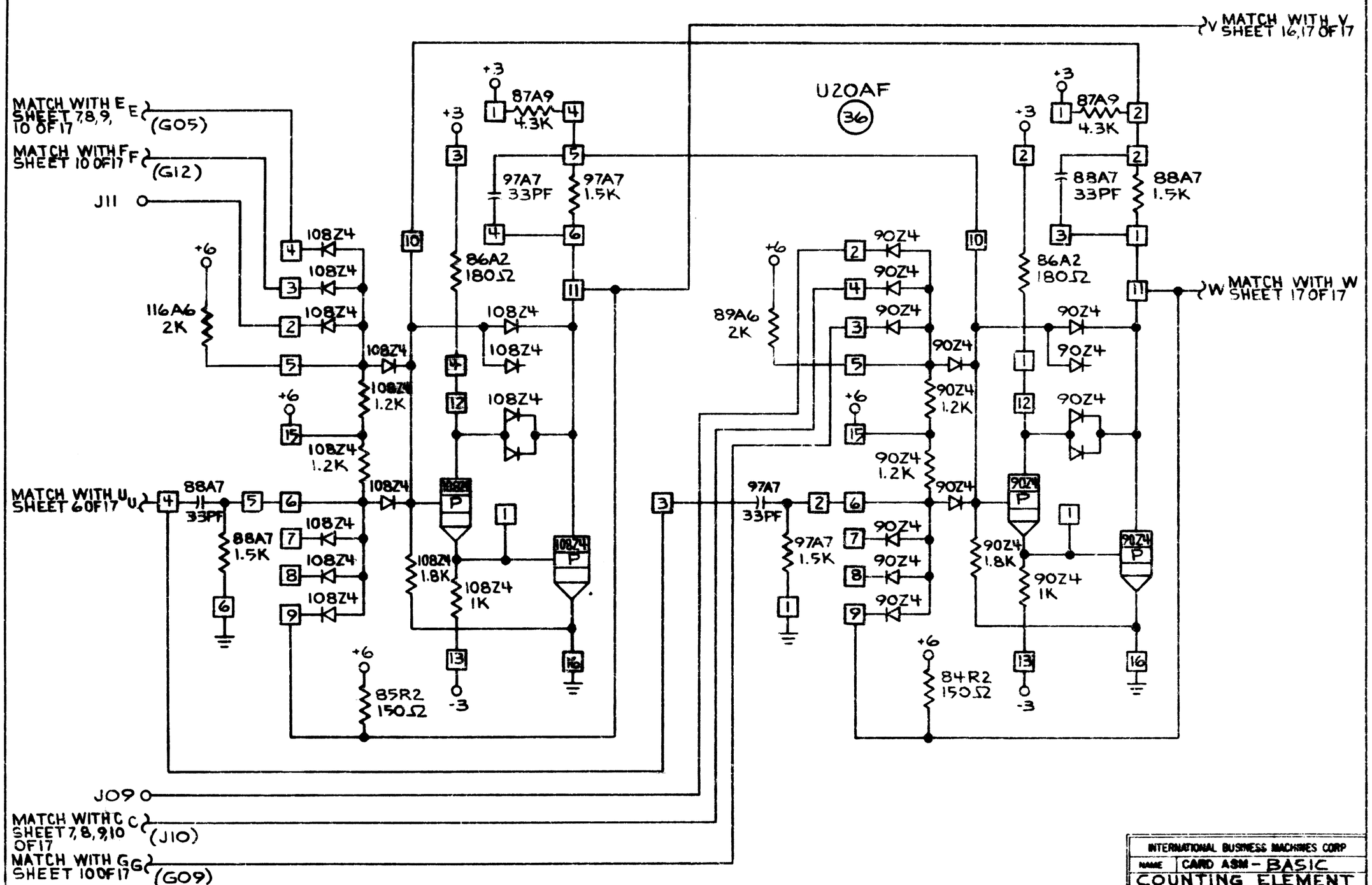

INTERNATIONAL BUSINESS MACHINES CORP				
NAME	CARD ASM - BASIC COUNTING ELEMENT			
DESIGN	RFZ	[redacted]	TYPE	APM-1
DETAIL	RFZ	[redacted]	SCALE	NONE
CHECK	RFZ	[redacted]	DRAW	CDA [redacted]
APPRO	PHS	[redacted]	CHECK	CDA [redacted]

6171085 C