5801725

STANDARDS CODE 2-7045

CARD CODE 1725 | 5801725

SHEET 3 OF 4

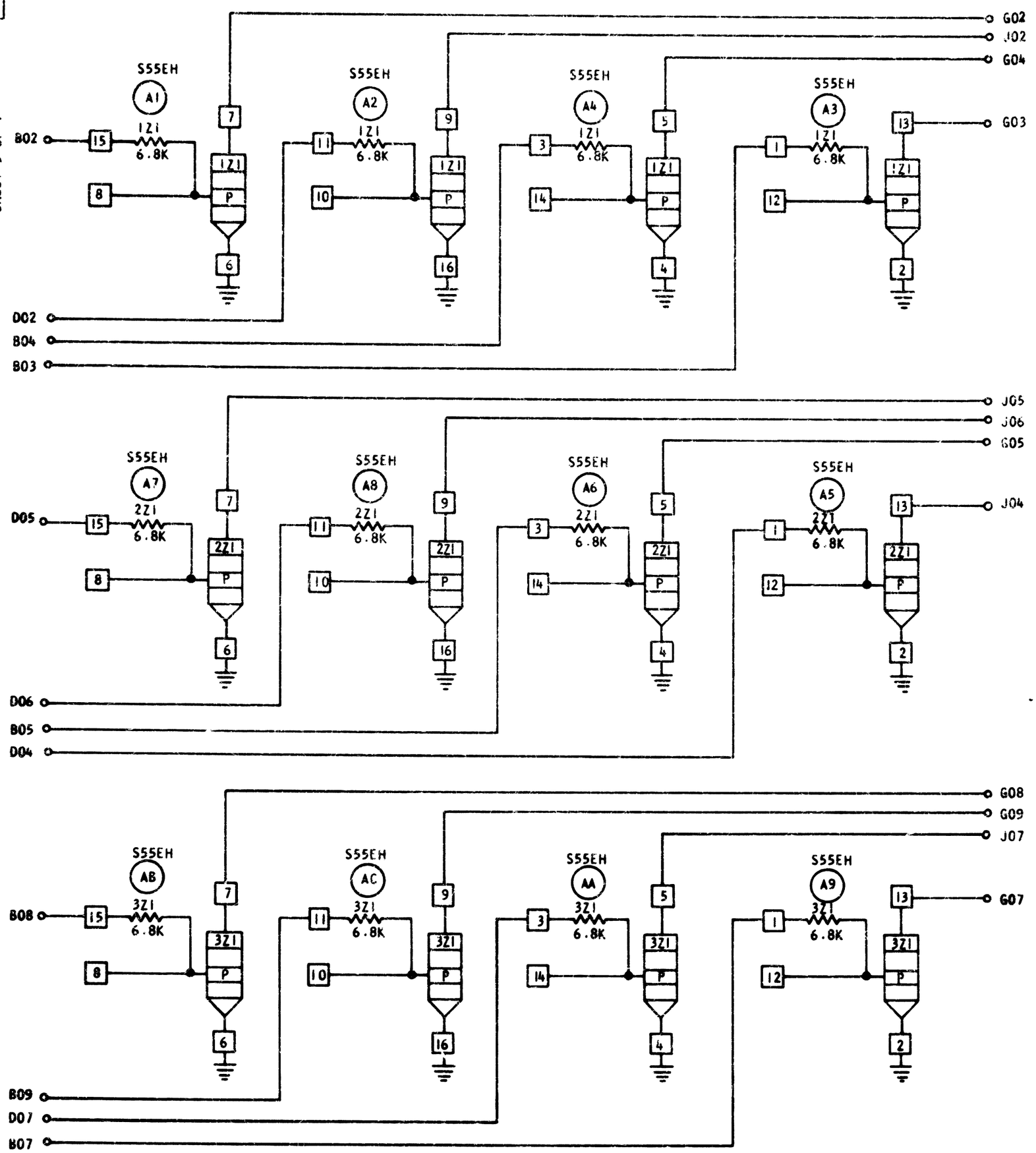

CIRCUIT AND PACKAGING STANDARD	
APPROVAL	DATE
PHS	7JUN67

[illegible]								DATE	CHANGE NO.	APPROVAL	DATE	CHANGE NO.	APPROVAL	DEVELOPMENT NO	5801725
NAME	CARD ASSEMBLY - SCREEN INDICATOR DRIVER							7JUN67	171677 A					S116412	
DRAWN	CFC	7JUN67	MODEL	8005											
DETAIL	CFC	7JUN67	SCALE	NONE											
CHECK	MFV	8JUN67	DRAW	LTG	8JUN67										
APPR	PHS	7JUN67	CHECK												

C

DOCUTYPE PRESS INC BROOKLYN 17 N Y STOCK NO 4007