580 1725

STANDARD CODE 2-7045

CARD CODE 1725

580 1725

SHEET 4 OF 4

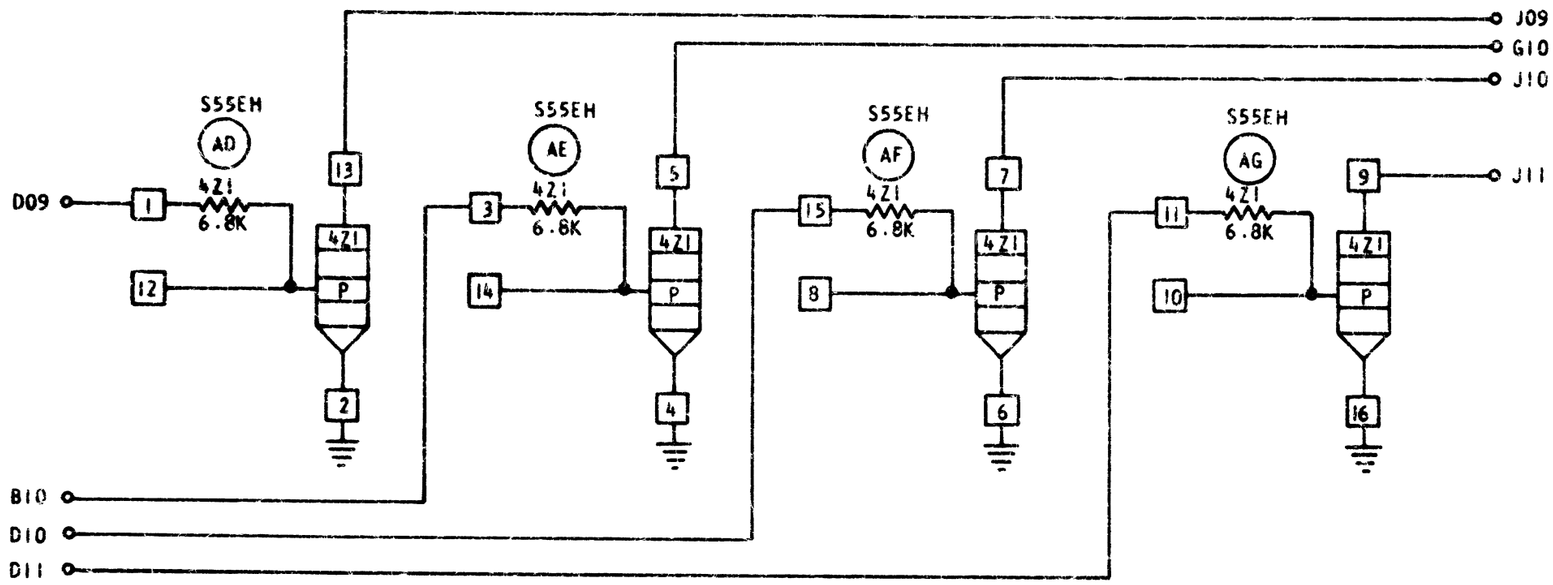

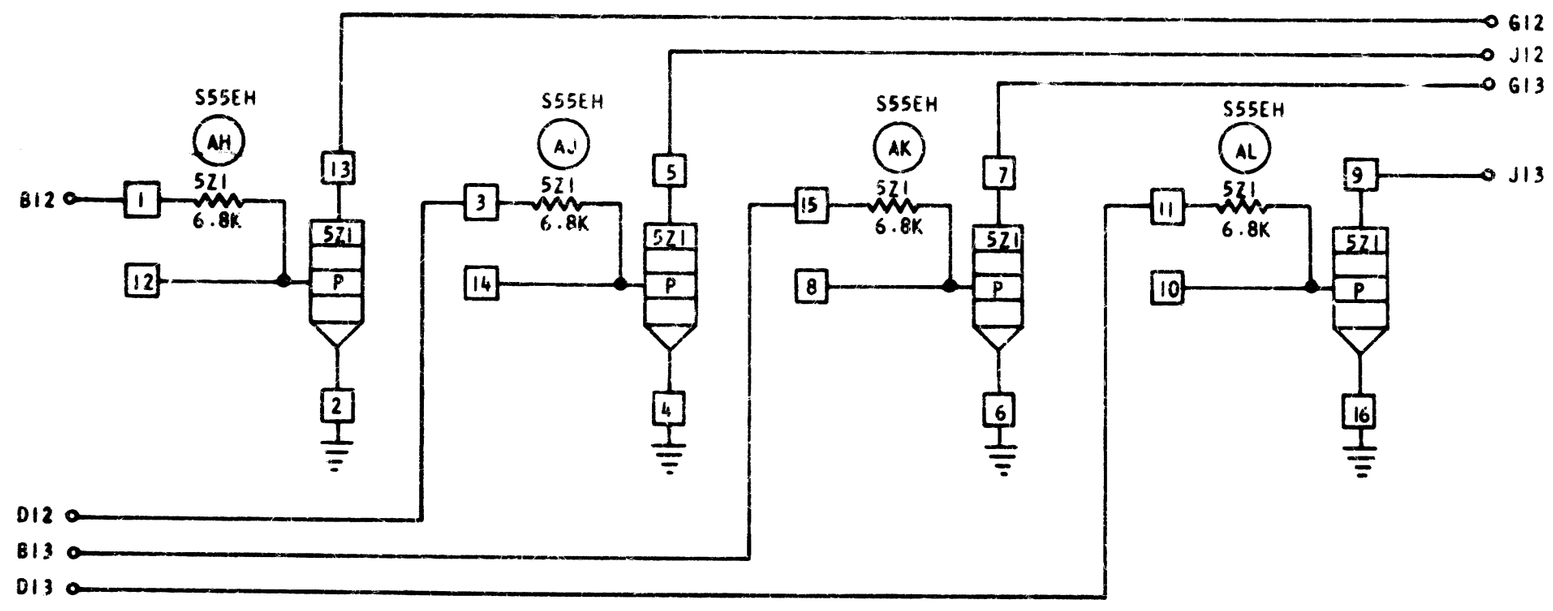

CIRCUIT AND PACKAGING STANDARD

APPROVAL	DATE
PHS	7JUN67

[redacted]					DATE	CHANGE NO.		APPROVAL	DATE	CHANGE NO.		APPROVAL	DEVELOPMENT NO.	580 1725
NAME	CARD ASSEMBLY - SCREW				7JUN67	171677	A						S116412	
	INDICATOR DRIVER													
DESIGN	CFC	7JUN67	SCALE	2085										
DETAIL	CFC	7JUN67	SCALE	NONE										
CHECK	RPV	8JUN67	LTR	8JUN67										
APPRO	PHS	7JUN67												

C