FORM 2-7045-6 (9-63)

STANDARDS CODE	CIRCUIT AND PACKAGING STANDARD		SYM	DATE	CHANGE NO	TECH APPRO	SYM	DATE	CHANGE NO	TECH APPRO	DEVELOPMENT NO	Q/M
2-7045				16OCT67	172203	A						
CARD CODE	APPROVAL	DATE										
1728	PHS	28SEP67									5801728	

SHEET 6 OF 18

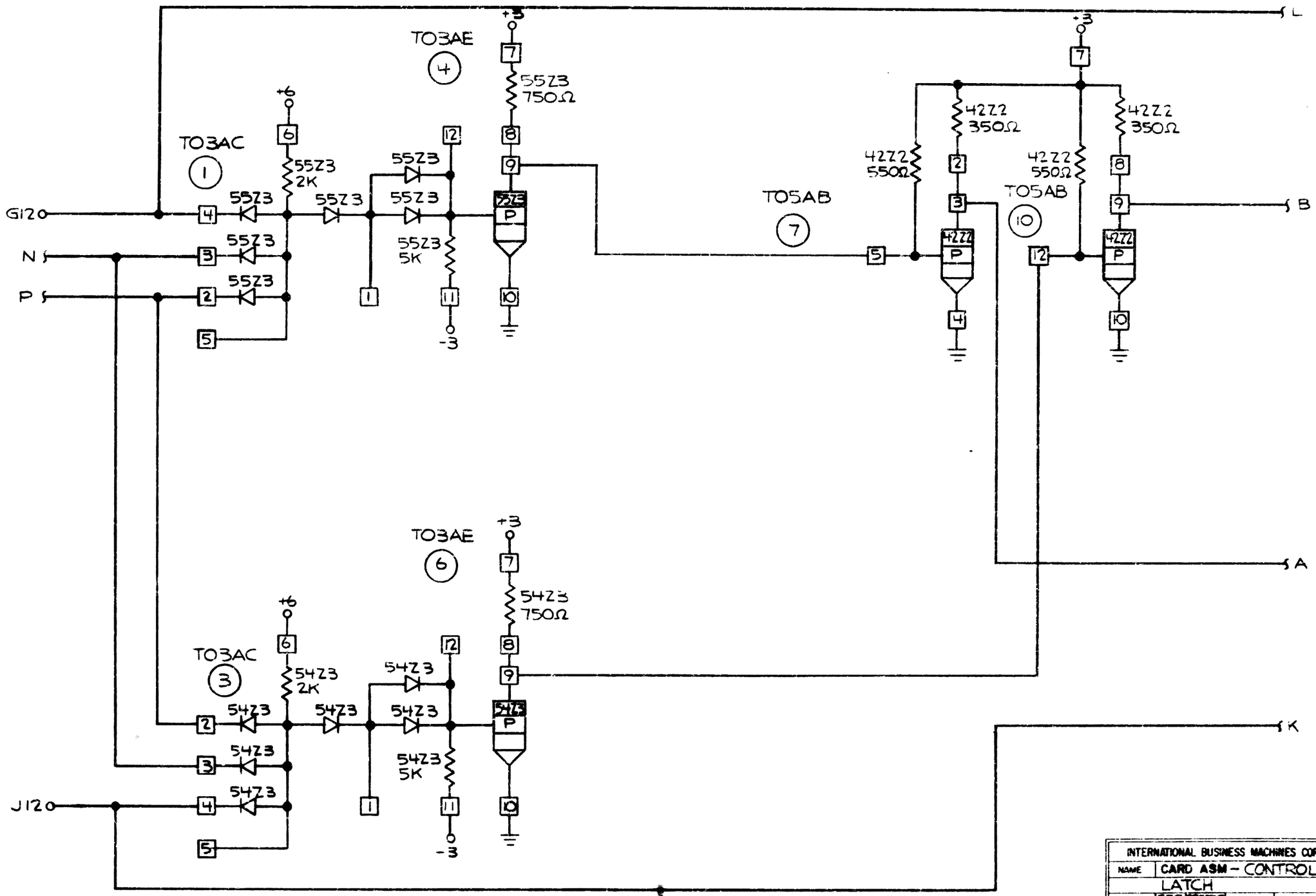

INTERNATIONAL BUSINESS MACHINES CORP				
NAME	CARD ASM - CONTROL LATCH			
DESIGN	CFC	22SEP67	TYPE	
DETAIL	CFC	22SEP67	SCALE	NONE
CHECK	RCE	28SEP67	DRAW	CDA 10CT67
APPRO	PHS	28SEP67	CHECK	CDA 10CT67

C 5801728