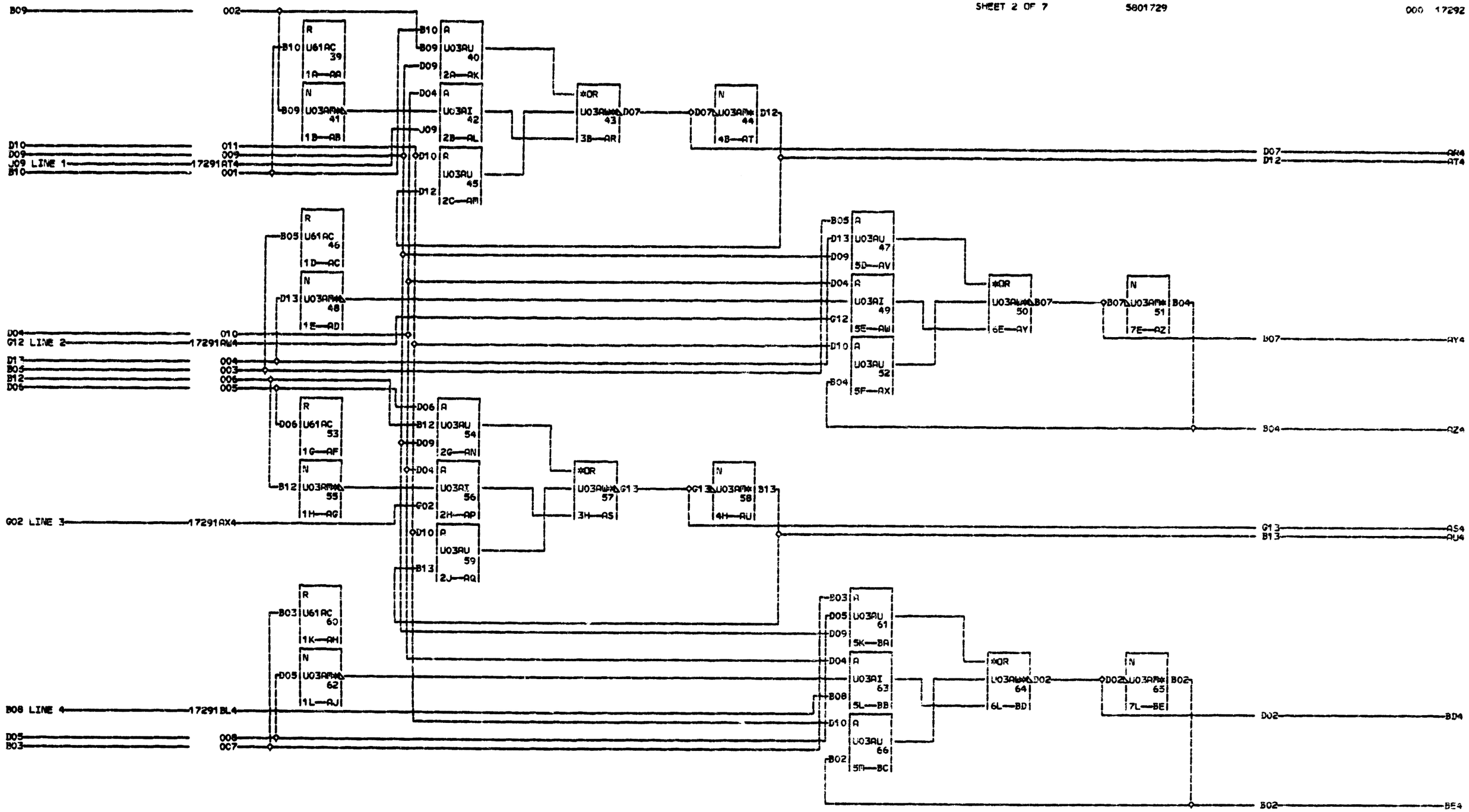

11-17-67 172219 R

RF AND RS PARITY CHECK BIT	
DATE 11-09-67 MACH. ASSEMBLY	
LOG 311Z FRAME	
P.N. 5901729	
IBM CORP. PD BLK. BF	

1
7
2
9
2
000