FORM 2-7045-6 (8-63)

STANDARDS CODE	CIRCUIT AND PACKAGING STANDARD		SYM	DATE	CHANGE NO	TECH APPRO	SYM	DATE	CHANGE NO	TECH APPRO	DEVELOPMENT NO	SYM
2-7045				24SEP65	DV 5330							
CARD CODE	APPROVAL	DATE										
1743	GHM	7-9-65									5801743	

SHEET 3 OF 4

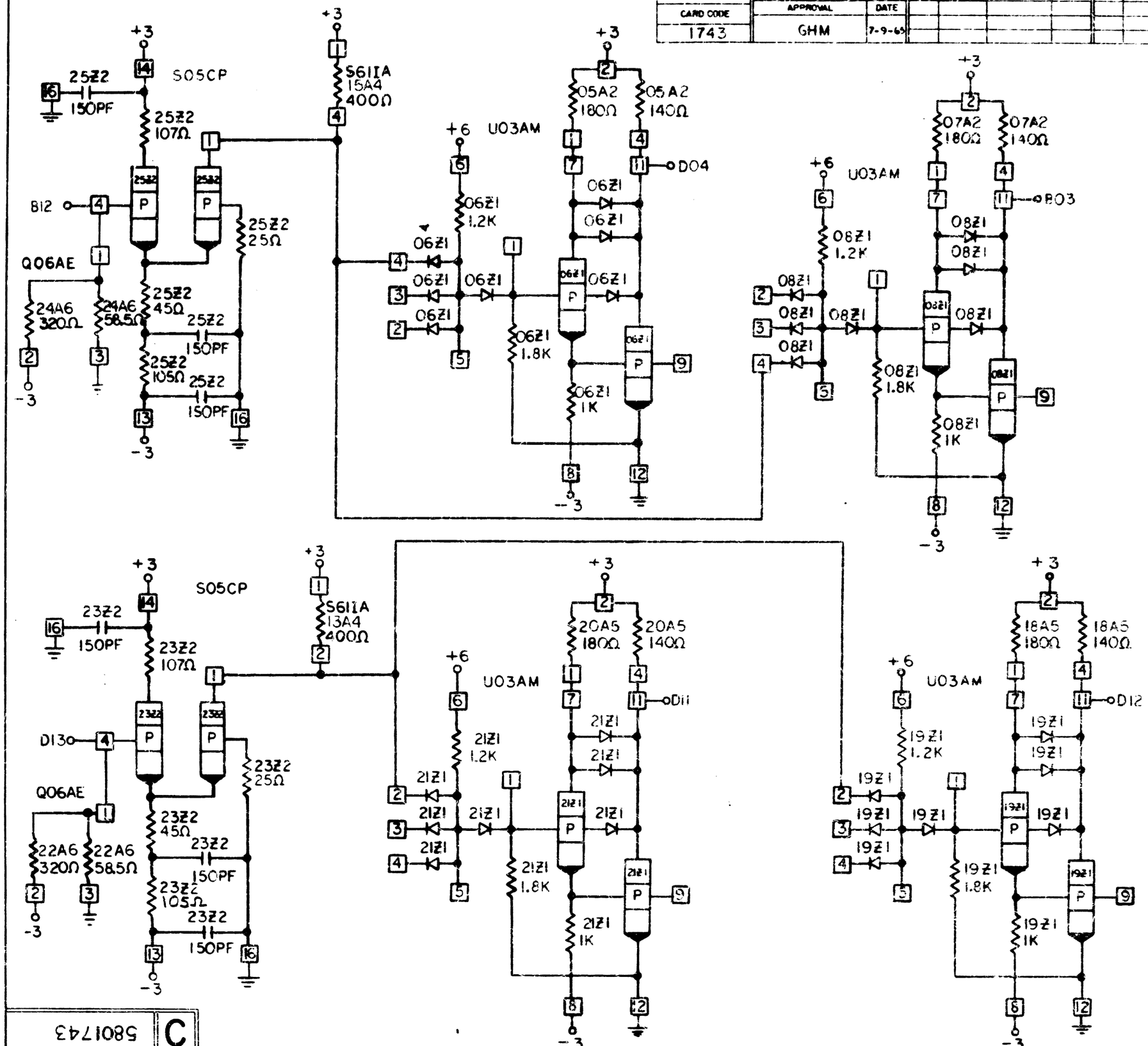

INTERNATIONAL BUSINESS MACHINES CORP				
NAME	CARD ASM – 4 CONVERTS ACPX TO AOI AND 8 DRIVERS			
DESIGN	C&D	7-9-65	TYPE	604
DETAIL	C&D	7-9-65	SCALE	NONE
CHECK	C&D	9-7-65	DRAW	
APPRO	GHM	7-9-65	CHECK	9-16-65

C 5801743