FORM 2-7045-6(8-63)

STANDARDS CODE	CIRCUIT AND PACKAGING STANDARD		SYM	DATE	CHANGE NO	TECH APPRO	SYM	DATE	CHANGE NO	TECH APPRO	DEVELOPMENT NO	SHEET
2-7045					DV5399-1							
CARD CODE	APPROVAL	DATE		3-27-66	DV5990-2							
1752	GHM	9-9-65		4-15-66	DV5997-3						5801752	SHEET 6 OF 6

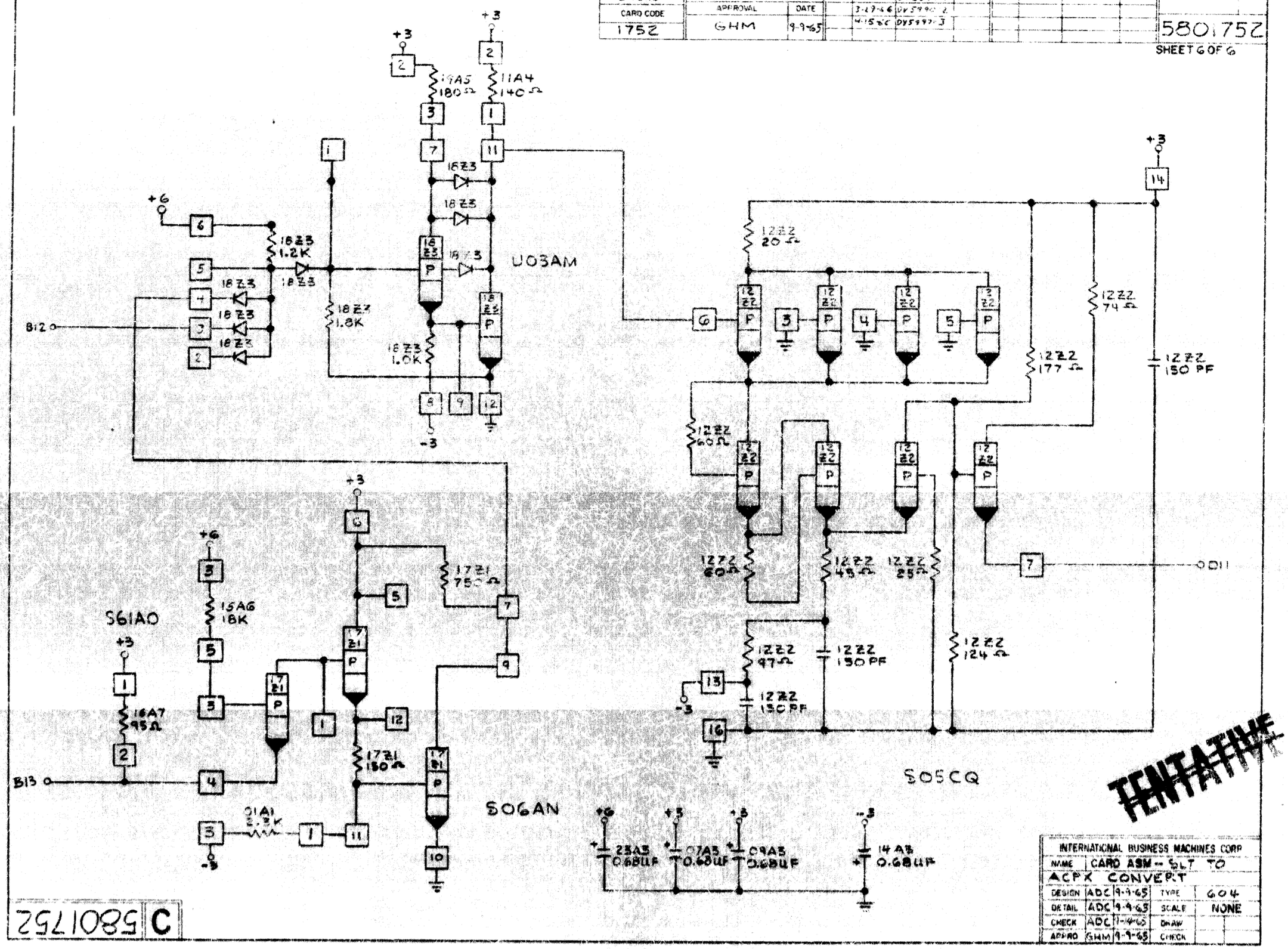

INTERNATIONAL BUSINESS MACHINES CORP				
NAME	CARD ASM -- SLT TO ACPX CONVERT			
DESIGN	ADC	9-9-65	TYPE	604
DETAIL	ADC	9-9-65	SCALE	NONE
CHECK	ADC	1-4-66	DRAW	
APPRO	GHM	9-9-65	CHECK	

5801752 C