STANDARDS CODE	CIRCUIT AND PACKAGING STANDARD		SYM	DATE	CHANGE NO	TECH APPRO	SYM	DATE	CHANGE NO	TECH APPRO	DEVELOPMENT NO	SYM
2-7045					DV53994							
CARD CODE	APPROVAL	DATE		3-27-66	DV53996							
1752	GHM	9-9-65		4-15-66	DV53997						580,752	

SHEET 6 OF 6

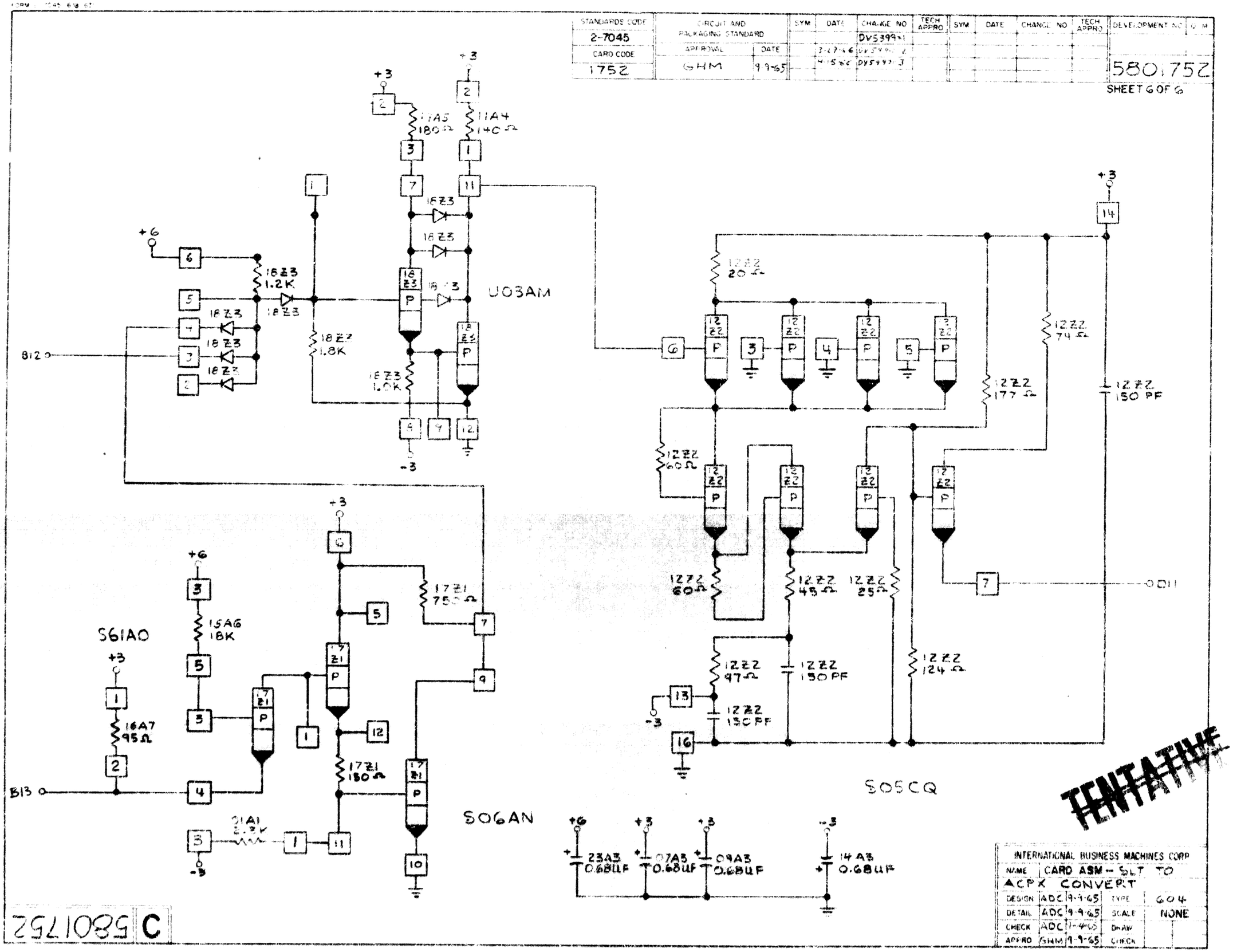

INTERNATIONAL BUSINESS MACHINES CORP				
NAME	CARD ASM -- SLT TO ACPX CONVERT			
DESIGN	ADC	9-9-65	TYPE	604
DETAIL	ADC	9-9-65	SCALE	NONE
CHECK	ADC	11-4-65	DRAW	
APPRO	GHM	9-9-65	CHECK	

580,752 C