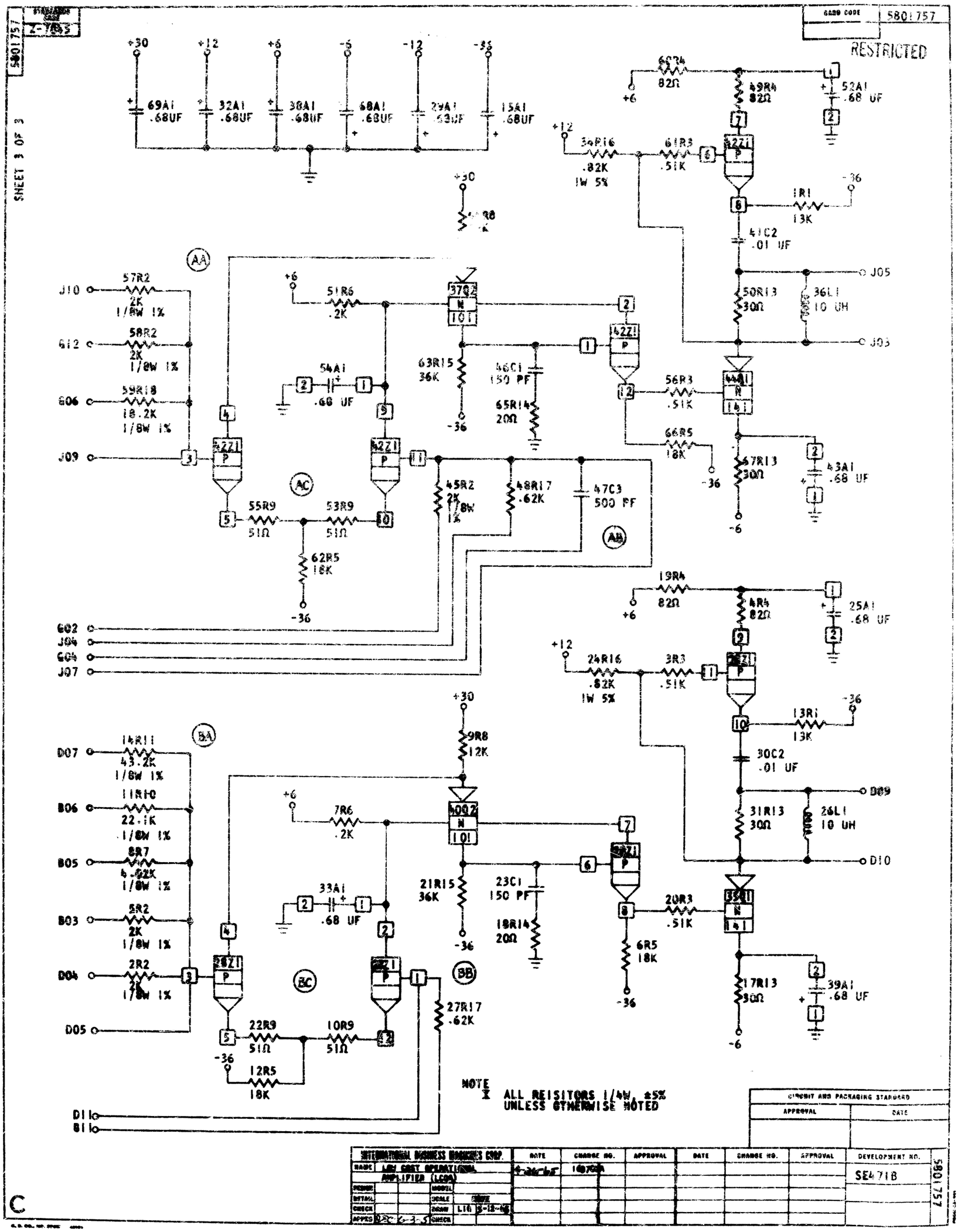
5801757
RESTRICTED
SHEET 3 OF 3
+30
+12
+6
-6
-12
-36
69A1 .68UF
32A1 .68UF
30A1 .68UF
68A1 .68UF
29A1 .68UF
15A1 .68UF
6R24 82Ω
49R4 82Ω
52A1 .68 UF
34R16 .82K 1W 5%
61R3 .51K
1R1 13K
41C2 .01 UF
J05
50R13 30Ω
36L1 10 UH
J03
57R2 2K 1/8W 1%
58R2 2K 1/8W 1%
59R18 18.2K 1/8W 1%
J10
G12
G06
J09
51R6 .2K
37Q2
54A1 .68 UF
63R15 36K
46C1 150 PF
65R14 20Ω
42Z1
56R3 .51K
44A1
66R5 18K
67R13 30Ω
43A1 .68 UF
55R9 51Ω
53R9 51Ω
62R5 18K
45R2 2K 1/8W 1%
48R17 .62K
47C3 500 PF
AA
AB
AC
G02
J04
G04
J07
19R4 82Ω
4R4 82Ω
25A1 .68 UF
24R16 .82K 1W 5%
3R3 .51K
13R1 13K
30C2 .01 UF
D09
31R13 30Ω
26L1 10 UH
D10
9R8 12K
14R11 43.2K 1/8W 1%
11R10 22.1K 1/8W 1%
8R7 4.02K 1/8W 1%
5R2 2K 1/8W 1%
2R2 2K 1/8W 1%
D07
B06
B05
B03
D04
D05
7R6 .2K
40Q2
33A1 .68 UF
21R15 36K
23C1 150 PF
18R14 20Ω
20R3 .51K
35Q1
6R5 18K
17R13 30Ω
39A1 .68 UF
BA
BB
BC
22R9 51Ω
10R9 51Ω
12R5 18K
27R17 .62K
D11
B11
NOTE
ALL REISITORS 1/4W, ±5%
UNLESS OTHERWISE NOTED
CIRCUIT AND PACKAGING STANDARD
APPROVAL
DATE
INTERNATIONAL BUSINESS MACHINES CORP.
NAME
LOW COST OPERATIONAL AMPLIFIER (LCOA)
DATE
CHANGE NO.
APPROVAL
DEVELOPMENT NO.
SE471B
5801757
C