STANDARDS CODE

5801758

RESTRICTED

CARD CODE 5801758

SHEET 3 OF 3

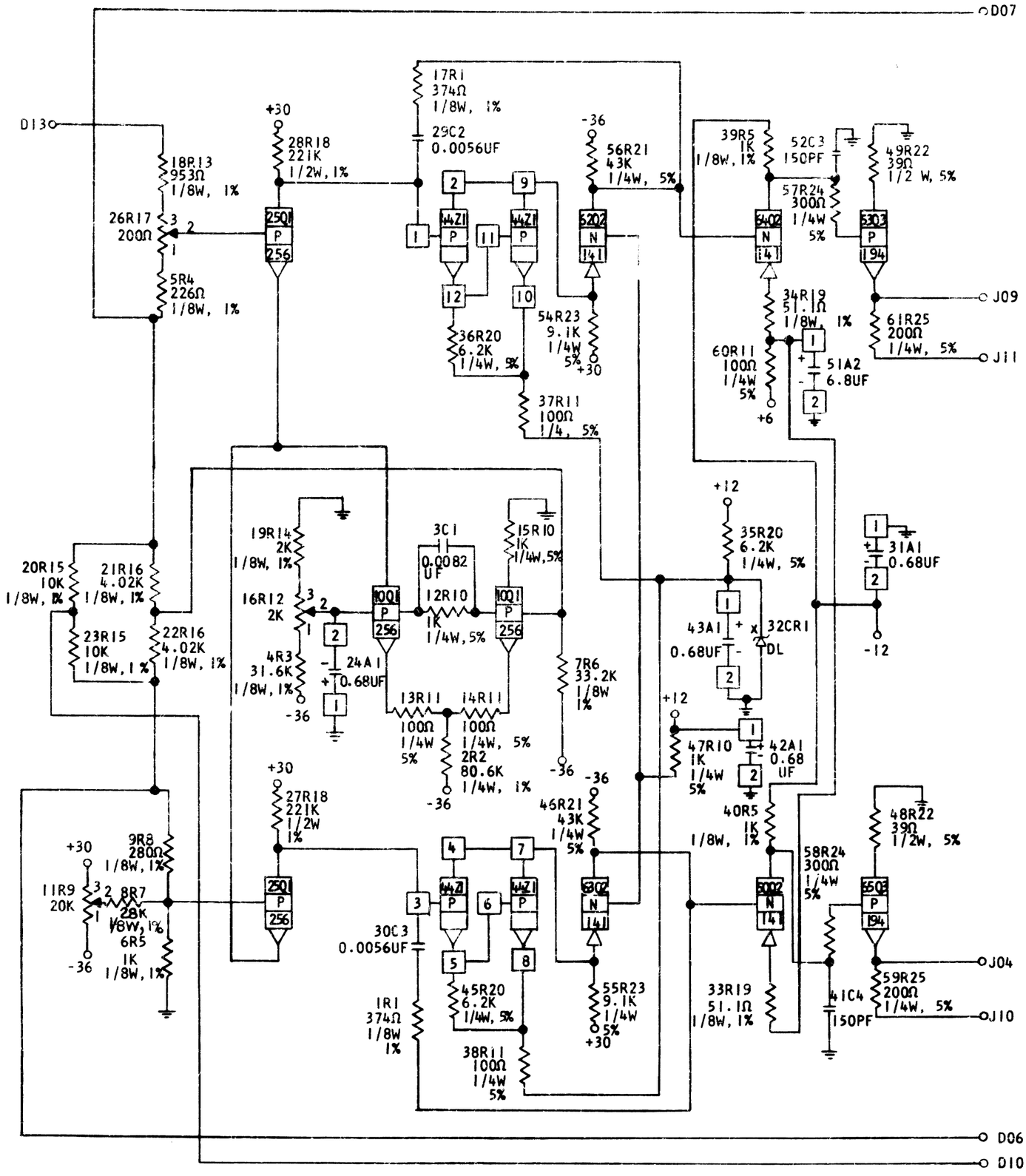

(GND) D08 & J08 – NOT BUSSED

CIRCUIT AND PACKAGING STANDARD	
APPROVAL	DATE

INTERNATIONAL BUSINESS MACHINES CORP.				DATE	CHANGE NO.		APPROVAL	DATE	CHANGE NO.	APPROVAL	DEVELOPMENT NO.	
NAME	CARD ASM-YOKE DRIVER DRIVER			6 Dec 65	163779	A					SE-482F	5801758
DESIGN		MODEL		8NOV66	168804	B						
DETAIL		SCALE										
CHECK		DRAW	VE 6DEC65									
APPRO		CHECK	JFS 12-8-65									

C