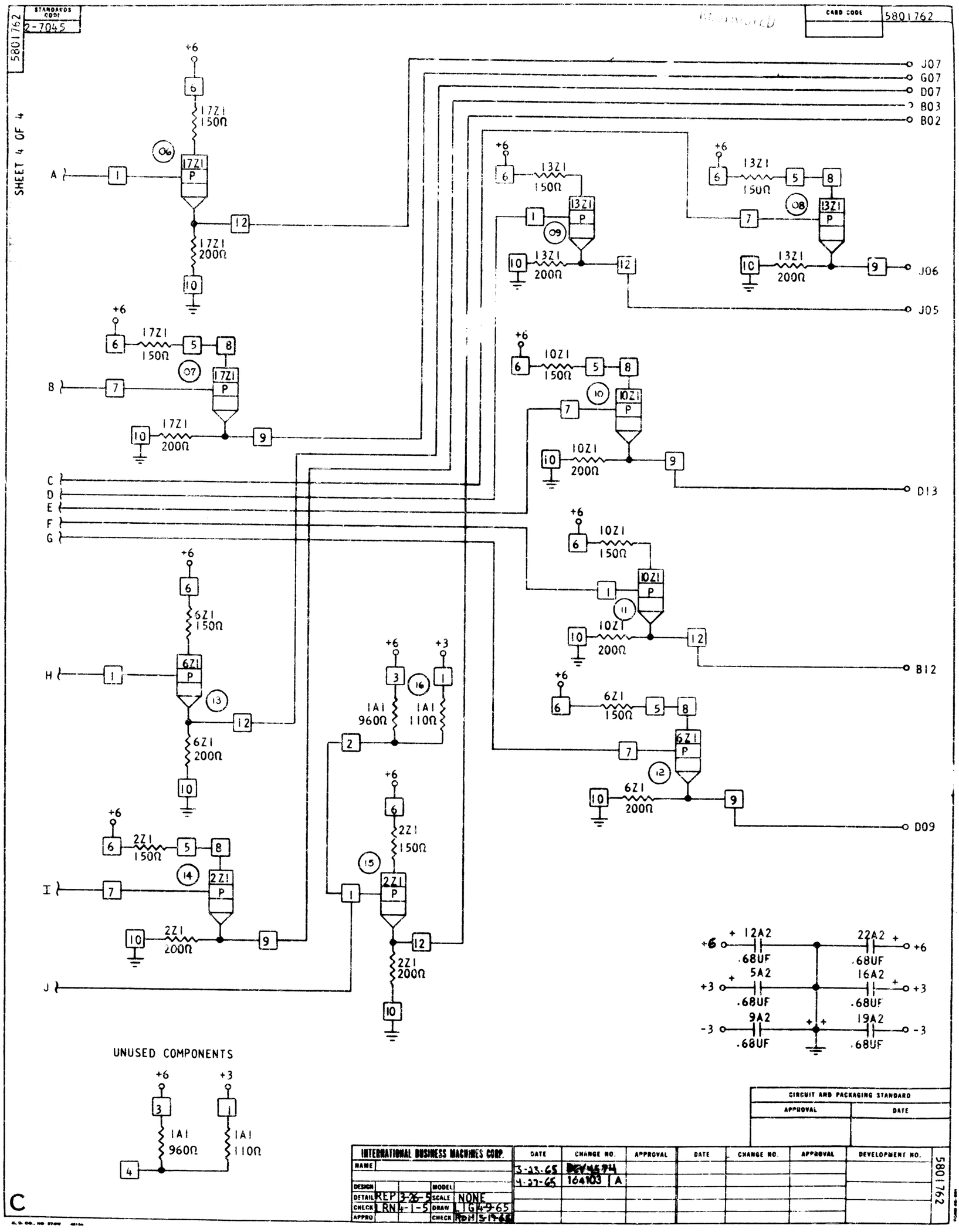
5801762
STANDARDS CODE
2-7045
CARD CODE
5801762
SHEET 4 OF 4
J07
G07
D07
B03
B02
J06
J05
D13
B12
D09
A
B
C
D
E
F
G
H
I
J
+6
+3
17Z1
150Ω
17Z1
200Ω
13Z1
150Ω
13Z1
200Ω
10Z1
150Ω
10Z1
200Ω
6Z1
150Ω
6Z1
200Ω
2Z1
150Ω
2Z1
200Ω
1A1
960Ω
1A1
110Ω
12A2
.68UF
22A2
.68UF
5A2
.68UF
16A2
.68UF
9A2
.68UF
19A2
.68UF
UNUSED COMPONENTS
CIRCUIT AND PACKAGING STANDARD
APPROVAL
DATE
INTERNATIONAL BUSINESS MACHINES CORP.
NAME
DESIGN
DETAIL REP 3-26-5
CHECK LRN 4-1-5
APPRO
MODEL
SCALE NONE
DRAW LIG 4-9-65
CHECK RDH 5-19-65
DATE
CHANGE NO.
APPROVAL
DEVELOPMENT NO.
3-23-65 DEV 4574
4-27-65 164103 A
5801762
C