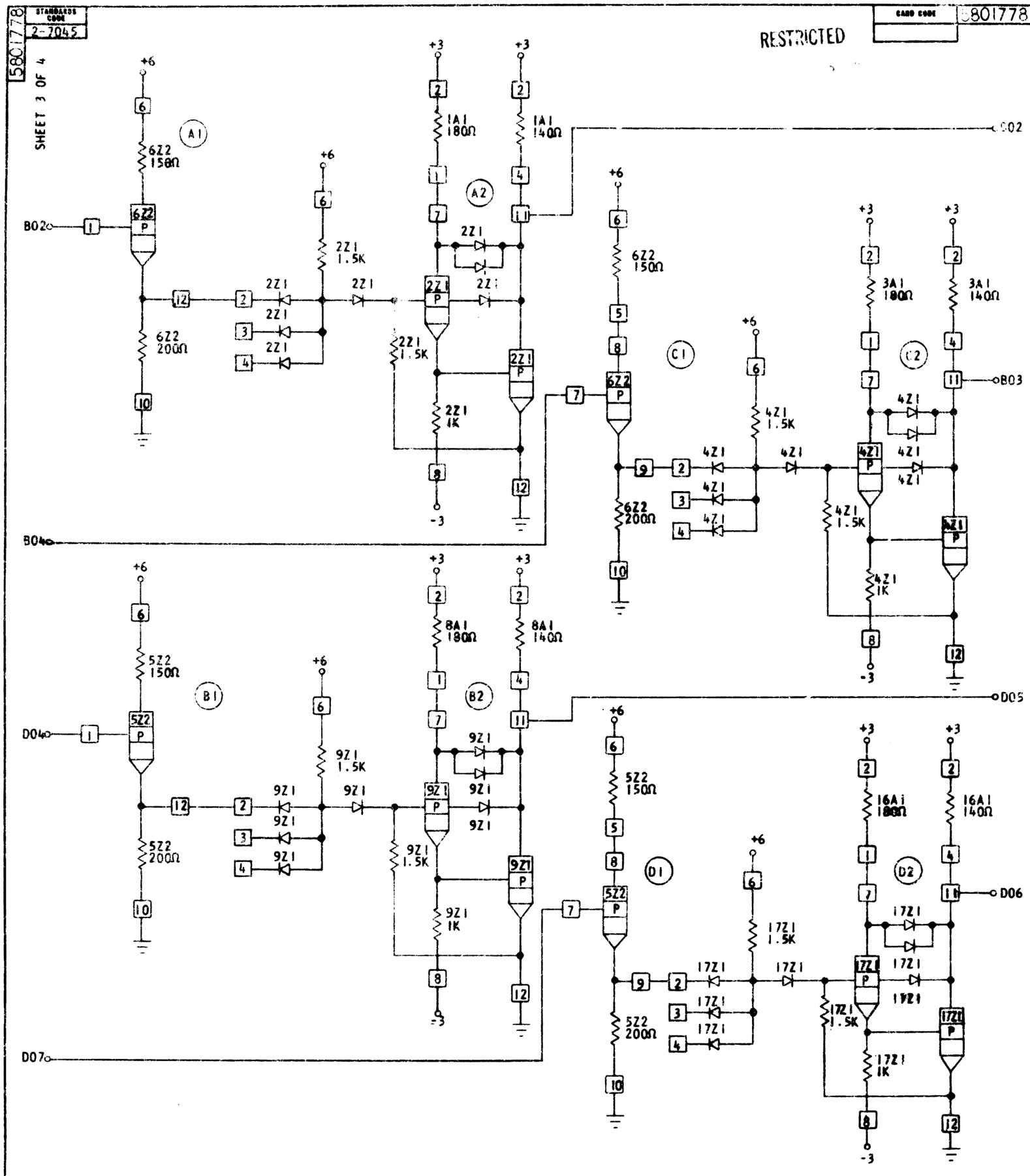


| CIRCUIT AND PACKAGING STANDARD | |
|---|---|
| APPROVAL | DATE |
| | |

| INTERNATIONAL BUSINESS MACHINES CORP. | | | | | | | | | | | | | | | | | |
|---|---|---|---|---|---|---|---|---|---|---|---|---|---|---|---|---|---|
| NAME | 18 RECEIVERS, LSA | | | | | | | DATE | CHANGE NO. | APPROVAL | DATE | CHANGE NO. | APPROVAL | DEVELOPMENT NO. | 5801778 |
| DESIGN | VMD4-9-65 | MODEL | | | | | | 5-5-65 | 164111 A | | | | | SM290 | |
| DETAIL | VMD4-9-65 | SCALE | NONE | | | | | | | | | | | | |
| CHECK | TR 4-20-65 | DRAW | VMD4-1965 | | | | | | | | | | | | |
| APPRO | | CHECK | TR 4-20-65 | | | | | | | | | | | | |

C