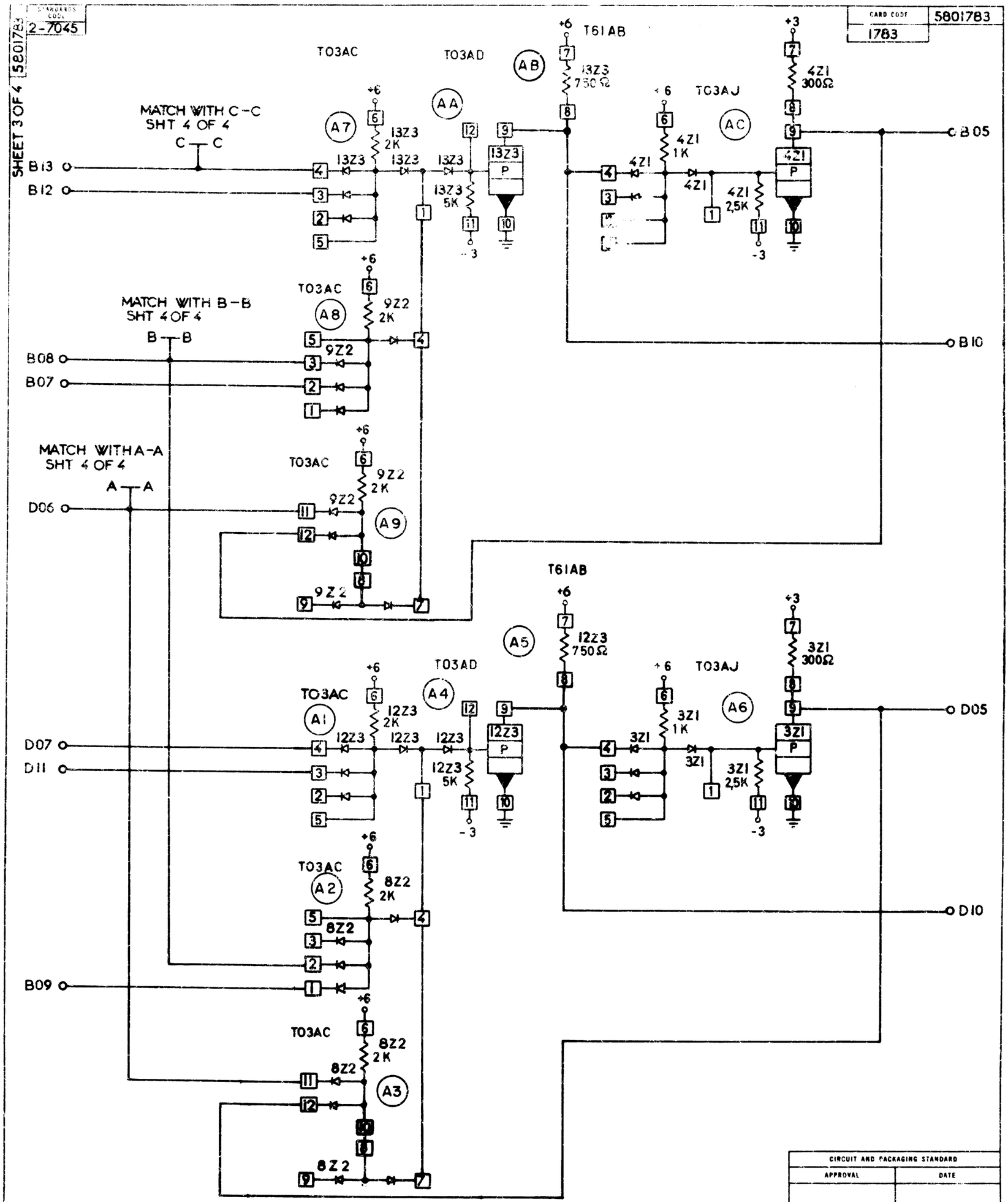
SHEET 3 OF 4
5801783
STANDARDS CODE
2-7045
CARD CODE
5801783
1783
T03AC
T03AD
T61AB
T03AJ
MATCH WITH C-C
SHT 4 OF 4
C — C
MATCH WITH B-B
SHT 4 OF 4
B — B
MATCH WITH A-A
SHT 4 OF 4
A — A
B13
B12
B08
B07
D06
D07
D11
B09
B05
B10
D05
D10
13Z3
2K
13Z3
5K
13Z3
750Ω
4Z1
1K
4Z1
2.5K
4Z1
300Ω
9Z2
2K
12Z3
2K
12Z3
5K
12Z3
750Ω
3Z1
1K
3Z1
2.5K
3Z1
300Ω
8Z2
2K
A7
A8
A9
AA
AB
AC
A1
A2
A3
A4
A5
A6
+6
+3
-3
P
CIRCUIT AND PACKAGING STANDARD
APPROVAL
DATE
INTERNATIONAL BUSINESS MACHINES CORP.
NAME CARD ASM
A/D REGISTER
DESIGN GTR 5.28.65
DETAIL YJE 5.28.65
CHECK GLN 5.31.65
APPRO
MODEL 2701
SCALE NONE
DRAW RDG 6-9-65
CHECK
DATE
CHANGE NO.
APPROVAL
DEVELOPMENT NO.
6.14.65 DV4638-1
7.23.65 163187A
12DEC66 169175 B
5801783
C