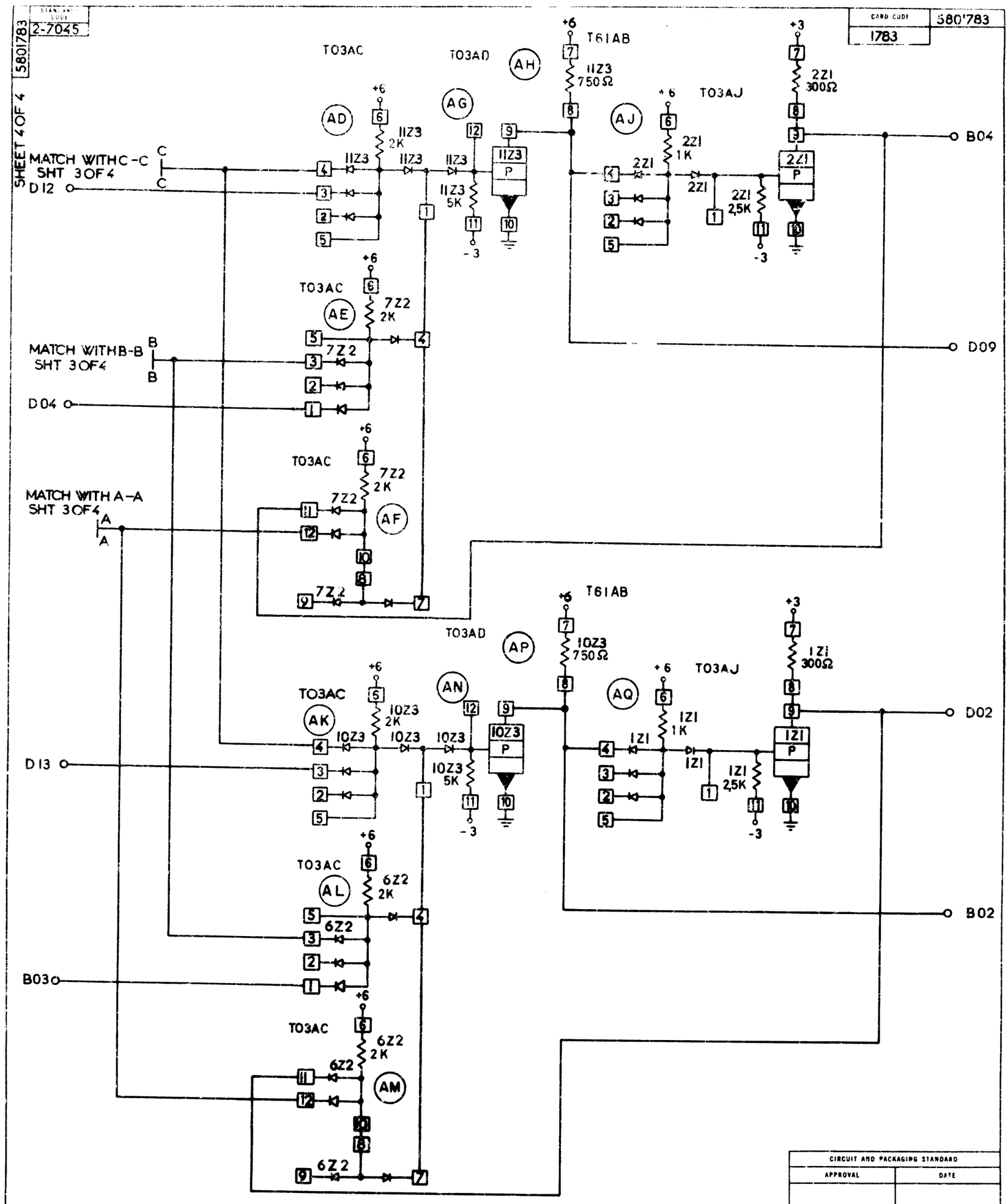
STANDARD CODE 2-7045
5801783
SHEET 4 OF 4
CARD CODE 1783
5801783
T03AC
T03AD
T61AB
T03AJ
AD
AG
AH
AJ
11Z3 2K
11Z3 750Ω
11Z3 5K
2Z1 1K
2Z1 300Ω
2Z1 2.5K
MATCH WITH C-C SHT 3 OF 4
D12
B04
D09
AE
7Z2 2K
MATCH WITH B-B SHT 3 OF 4
D04
AF
MATCH WITH A-A SHT 3 OF 4
AP
AN
AQ
AK
10Z3 2K
10Z3 750Ω
10Z3 5K
1Z1 1K
1Z1 300Ω
1Z1 2.5K
D02
D13
B02
AL
6Z2 2K
B03
AM
CIRCUIT AND PACKAGING STANDARD
APPROVAL
DATE
INTERNATIONAL BUSINESS MACHINES CORP.
NAME CARD ASM
A/D REGISTER
DESIGN GTR 5.28.65 MODEL 2701
DETAIL TJE 5.28.65 SCALE NONE
CHECK GLN 5.31.65 DRAW HDG 6.8.65
APPRO CHECK
DATE
CHANGE NO.
APPROVAL
DEVELOPMENT NO.
6.14.65 DV4638-1
7.23.65 163187A
12 DEC 66 169176 B
5801783
C