STANDARDS CODE 2-7045

D CODE 5801792
1792

SHEET 3 OF 4 5801792

T45LL

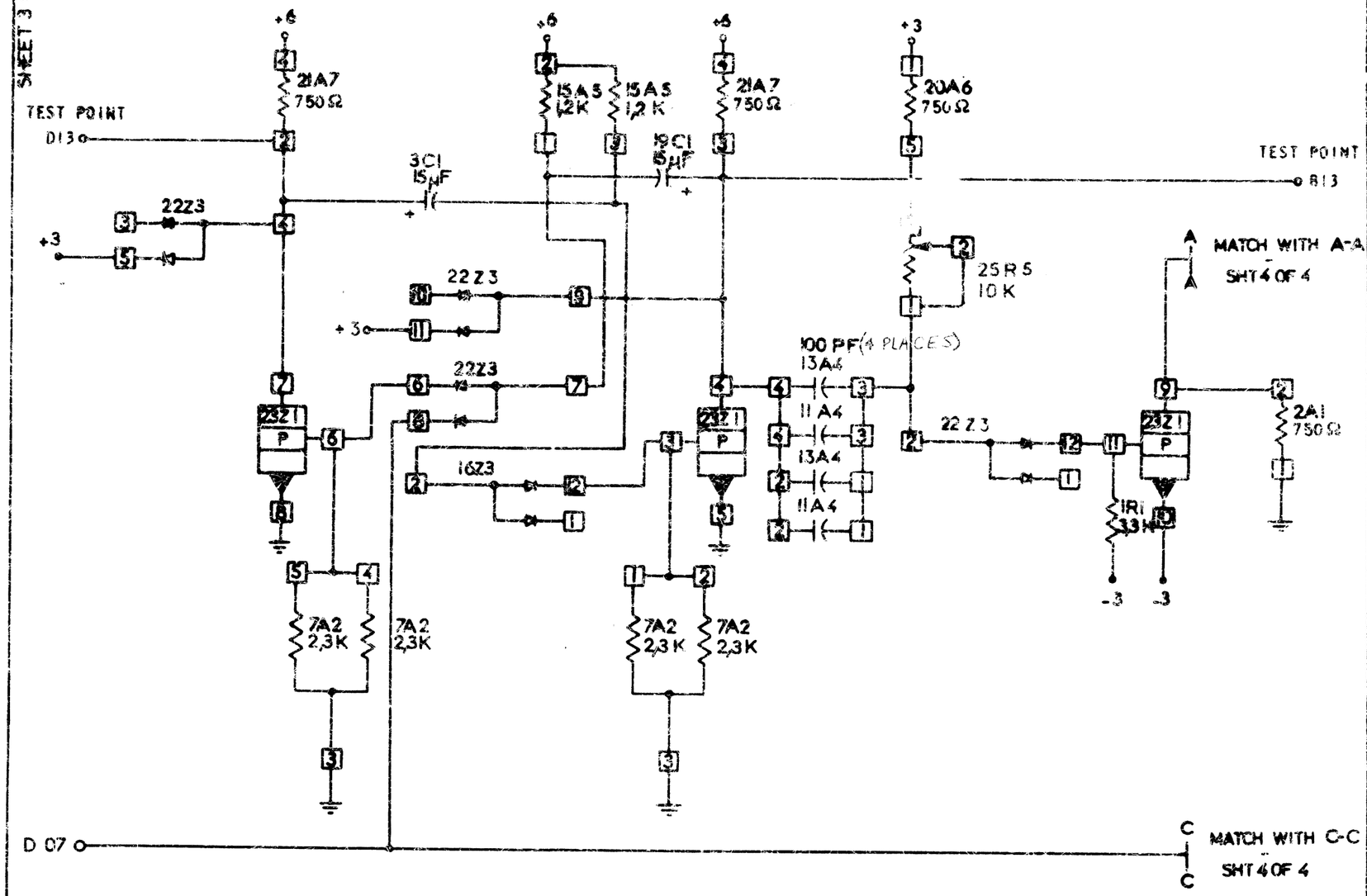

UNUSED COMPONENTS

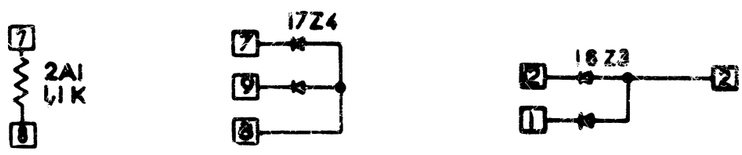

VOLTAGE PIN BUSSING NON EXISTENT

CIRCUIT AND PACKAGING STANDARD	
APPROVAL	DATE

INTERNATIONAL BUSINESS MACHINES CORP.				DATE	CHANGE NO.		APPROVAL	DATE	CHANGE NO.	APPROVAL	DEVELOPMENT NO.
NAME	CARD ASM			7-30-65	164883	A					
	TIME OUT 23 SEC			8DEC65	167237	B					
DESIGN	KJC 8-2-65	MODEL	27C1	20APR66	165824	C					
DETAIL	KJC 8-2-65	SCALE	NONE								
CHECK	MEJ 8-2-65	DRAW	RDG 7-2-65								
APPRO		CHECK									

5801792

C