STANDARDS CODE 2-7045 RESTRICTED

RESTRICTED CARD CODE 1795 5801795

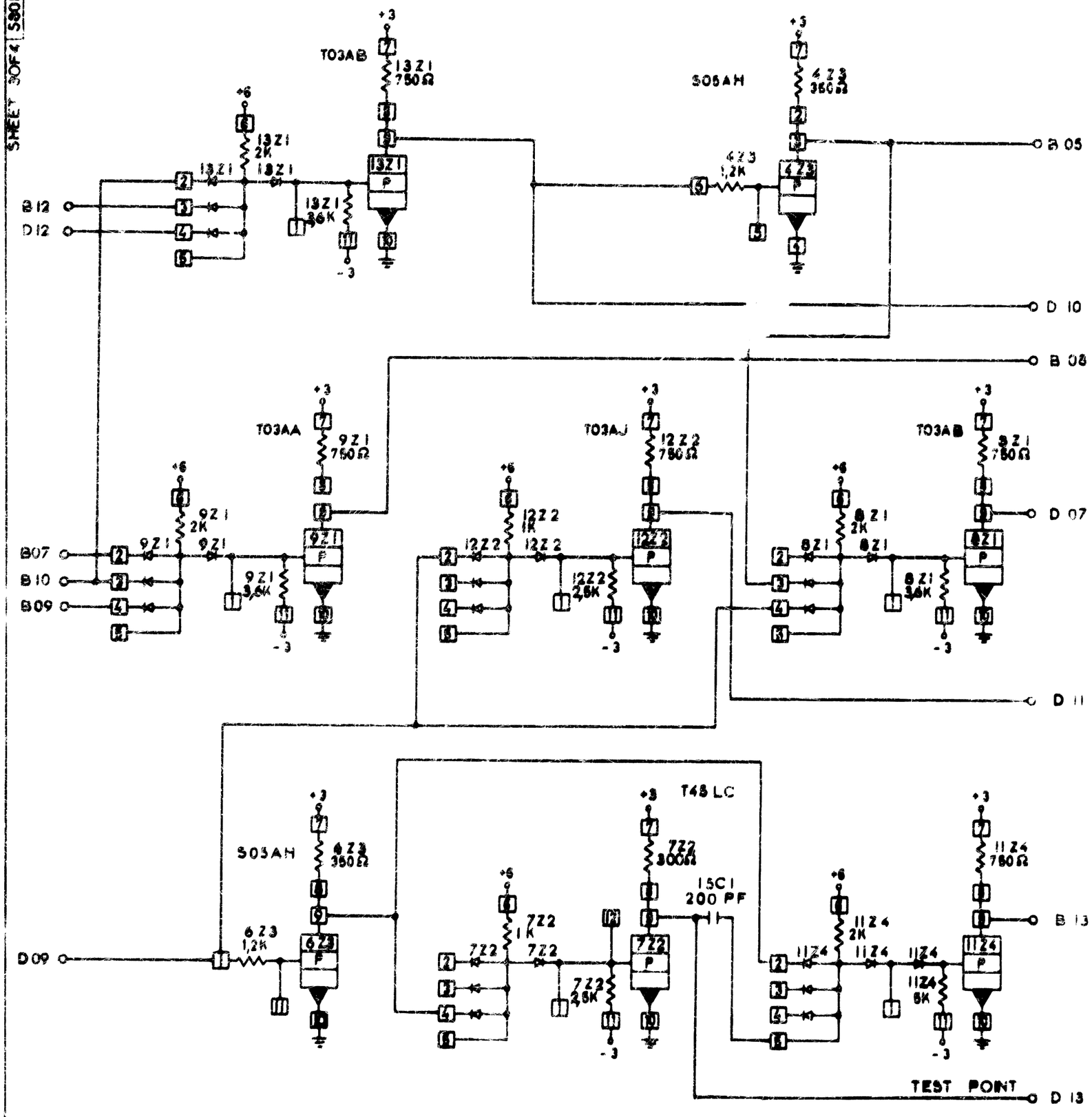

CIRCUIT AND PACKAGING STANDARD

APPROVAL	DATE

INTERNATIONAL BUSINESS MACHINES CORP	DATE	CHANGE NO	APPROVAL	DATE	CHANGE NO	APPROVAL	DEVELOPMENT NO	
CARD ASM AUTO CALL CONTROL I JMF 82648 2701 JMF 82648 NONE MBU 2-1-66 DEC 1-1965	09-30-65	164 903 A					5801795	5801795

C