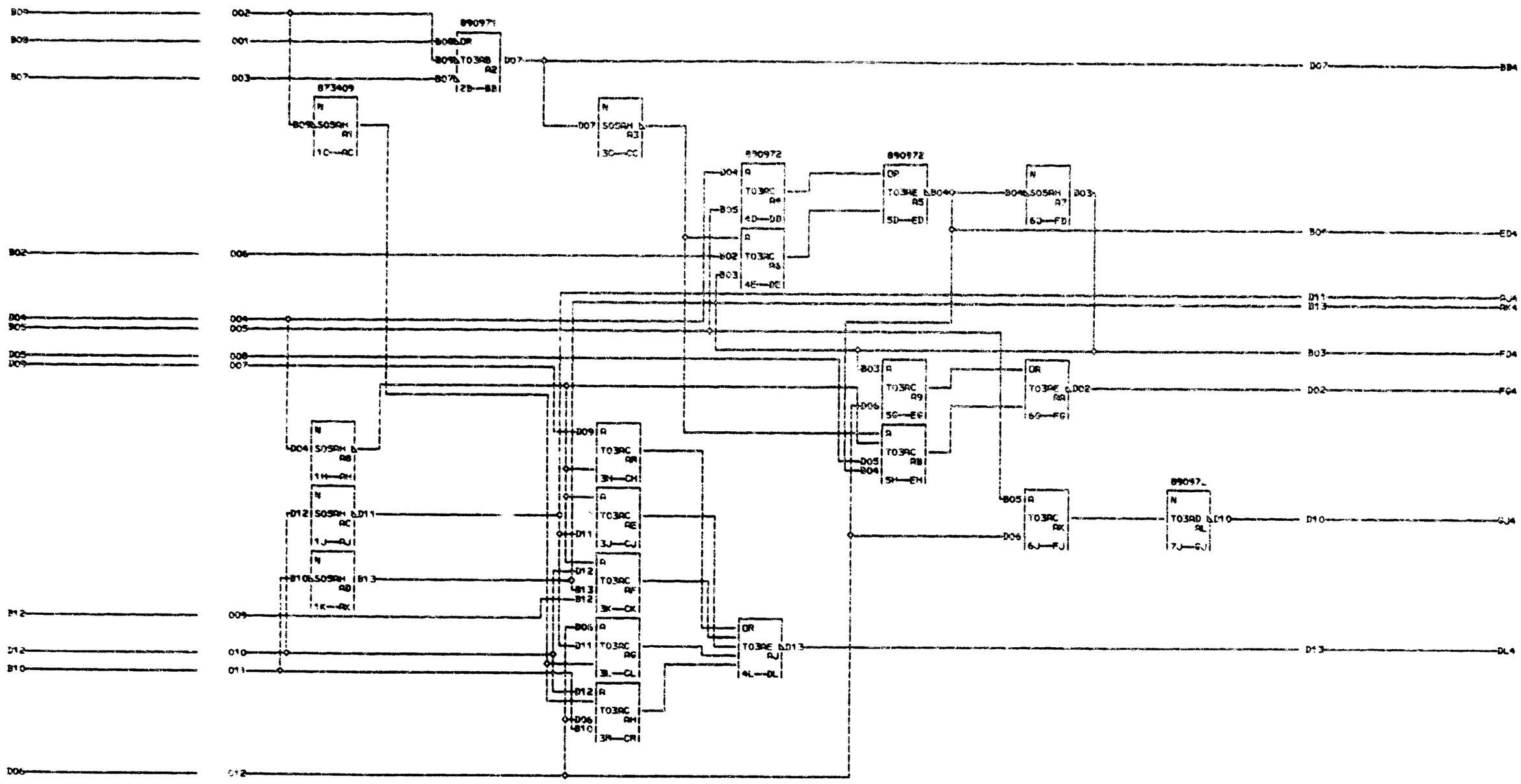

CARD SIZED 1-42 PAC T65
VOLTAGE PINS
1 +6V0B11 +3V0D03
8 -3V0B06 GND0D08
0 SPECIAL RESTRICTED
6
1

000

11-25-65 165803 A

ENABLED ADAPTER			
DATE 11-18-65	MACH. ASSEMBLY		1
LOG 0001	FRAME		8
	PaNo 5801806		0
IBM CORPo PR	BLKo	GK	6
			1
			000