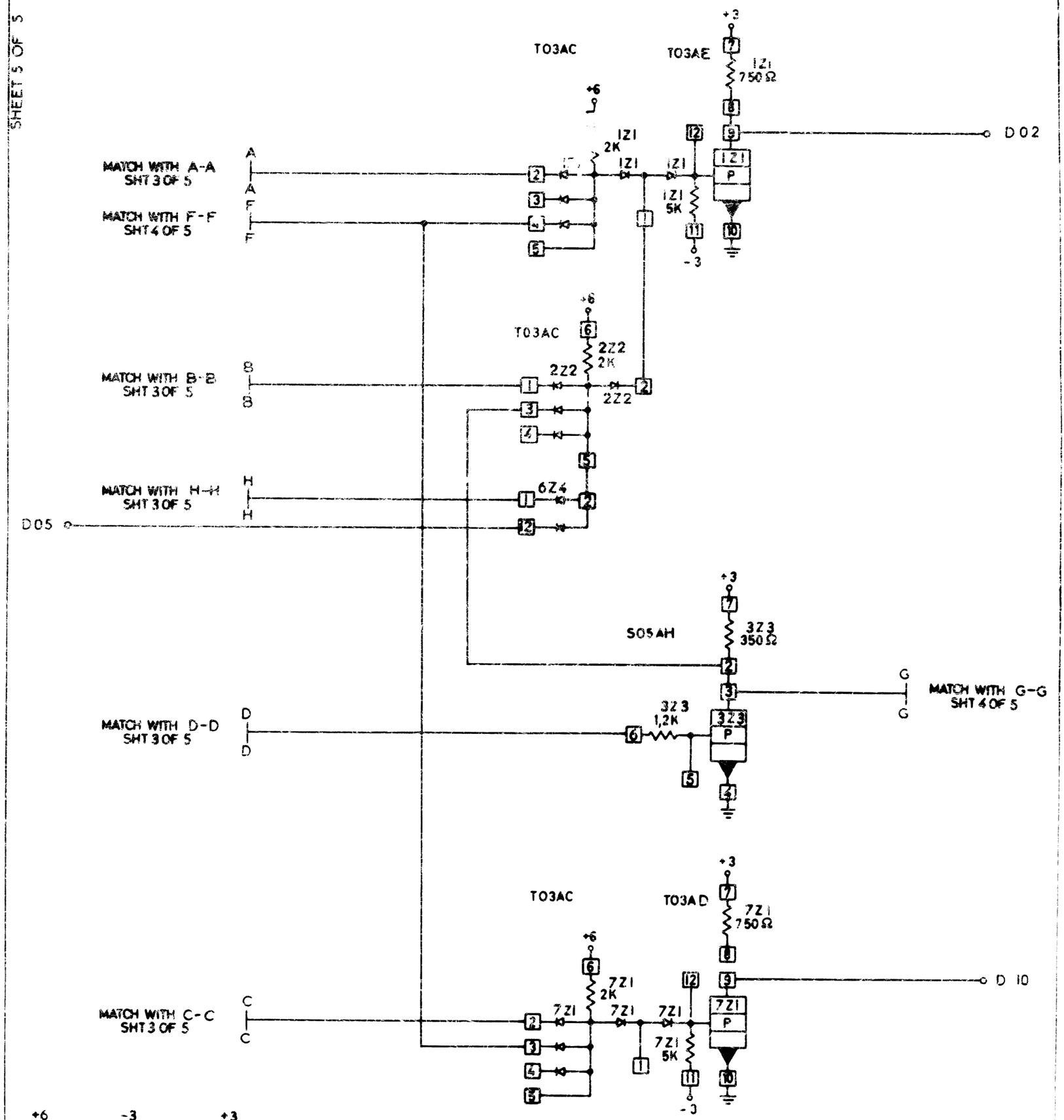

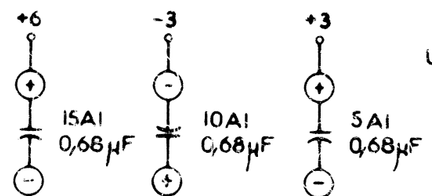

UNUSED COMPONENTS

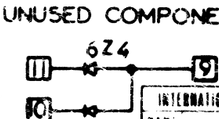

INTERNATIONAL BUSINESS MACHINES CORP	DATE	CHANGE NO	APPROVAL	DATE	CHANGE NO	APPROVAL	DEVELOPMENT NO			
NAME CARD ASM ENABLED ADAPTER	11.25.65	165803 A								
DESIGN MBU 021-65 / 2701										
DRAWN MBU 021-65 / NONE										
CHECK MBU 022-65 / DRGP RDG 102866										
APPRO CHELP										

CIRCUIT AND PACKAGING STANDARD	
APPROVAL	DATE