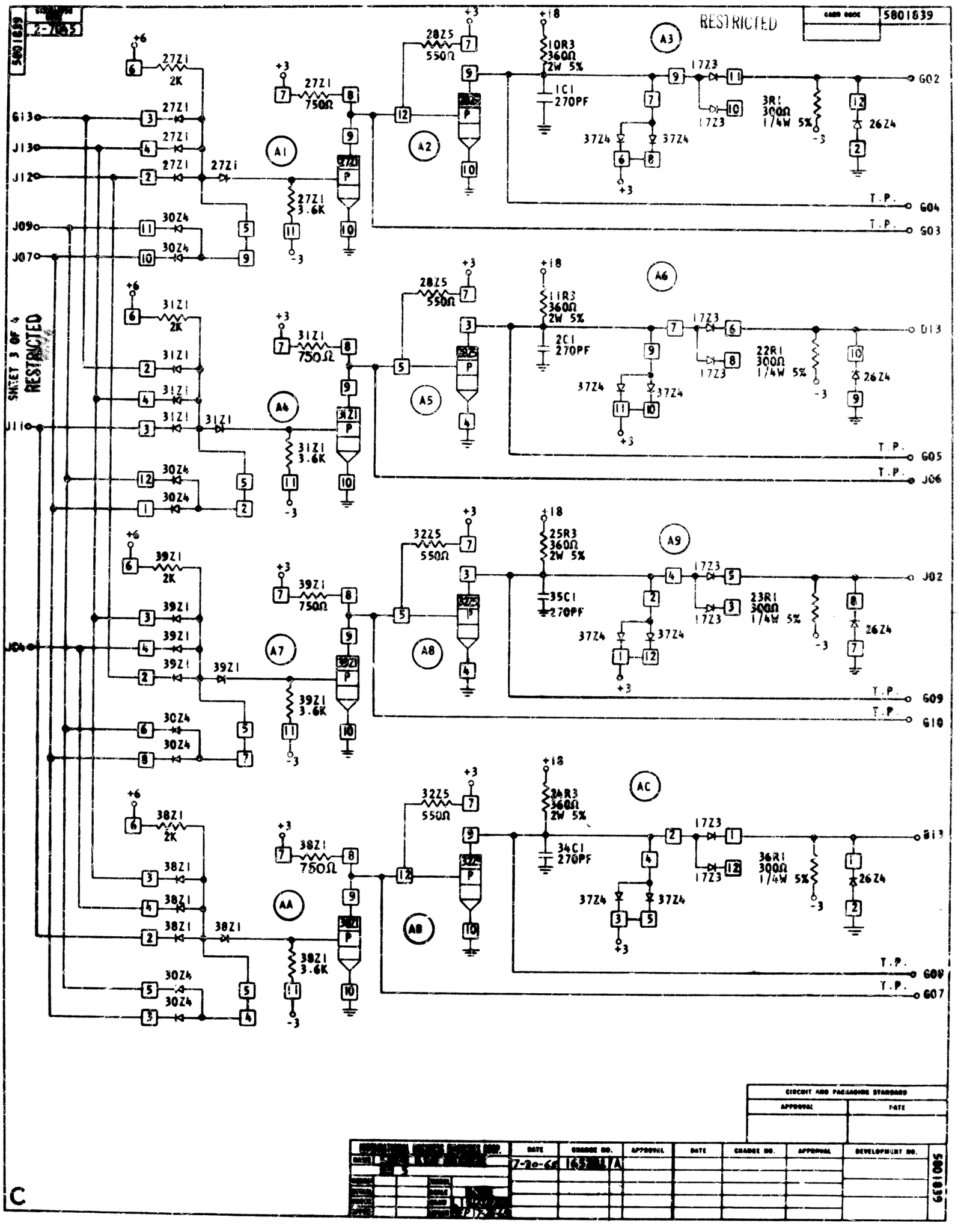

CIRCUIT AND PACKAGING STANDARD	
APPROVAL	DATE

	DATE	CHANGE NO.	APPROVAL	DATE	CHANGE NO.	APPROVAL	DEVELOPMENT NO.
	7-20-65	[illegible]					

5801839

C