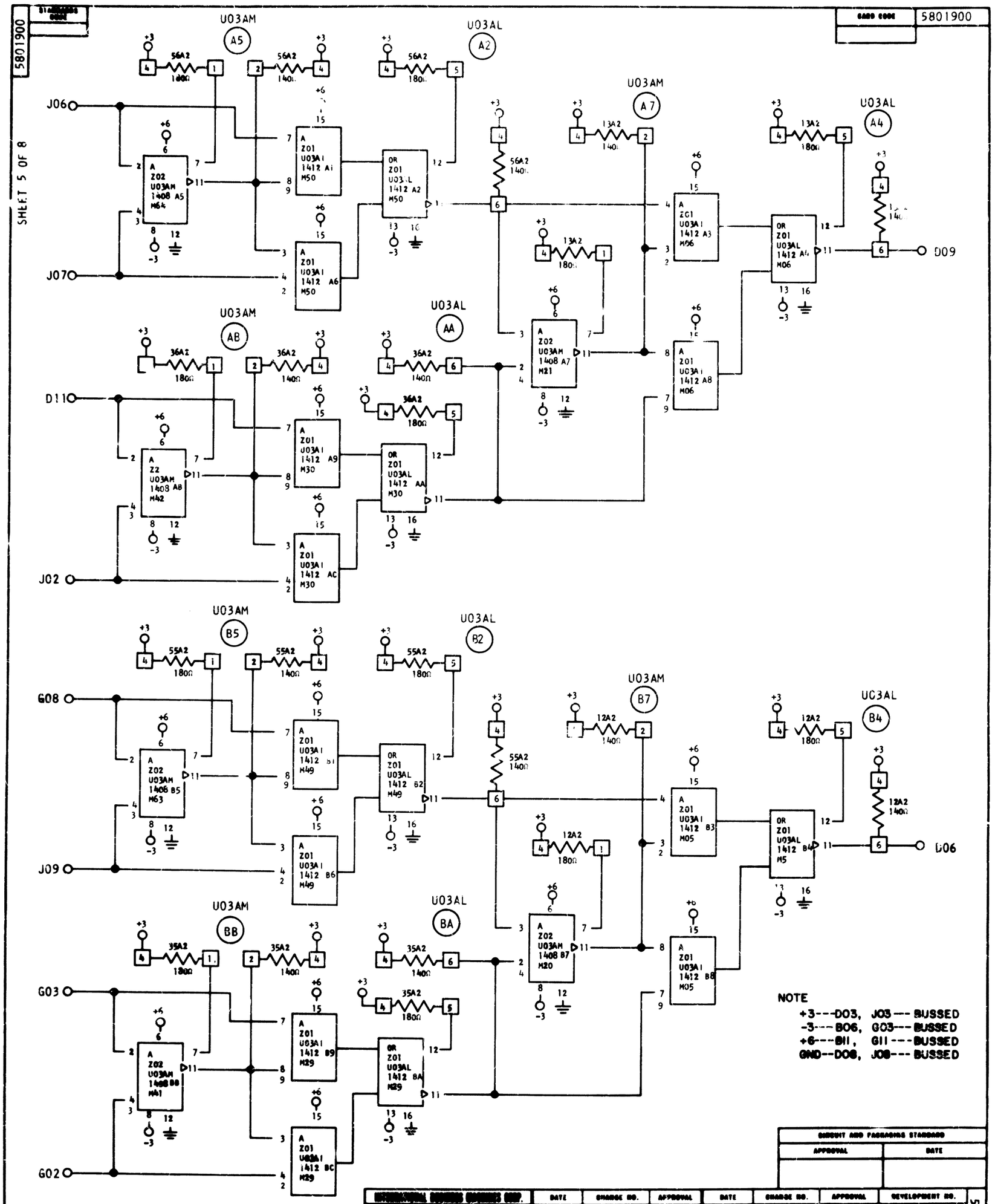
5801900
SHEET 5 OF 8
CARD CODE 5801900
U03AM A5
U03AL A2
U03AM A7
U03AL A4
U03AM AB
U03AL AA
U03AM B5
U03AL B2
U03AM B7
U03AL B4
U03AM BB
U03AL BA
J06
J07
D09
D11
J02
G08
J09
D06
G03
G02
NOTE
+3---D03, J03--- BUSSED
-3---B06, G03--- BUSSED
+6---B11, G11---BUSSED
GND--D08, J08--- BUSSED
CIRCUIT AND PACKAGING STANDARD
APPROVAL
DATE
1 AND 2 STAGE EXCLUSIVE OR
OCT 67
172220
A
5801900
C