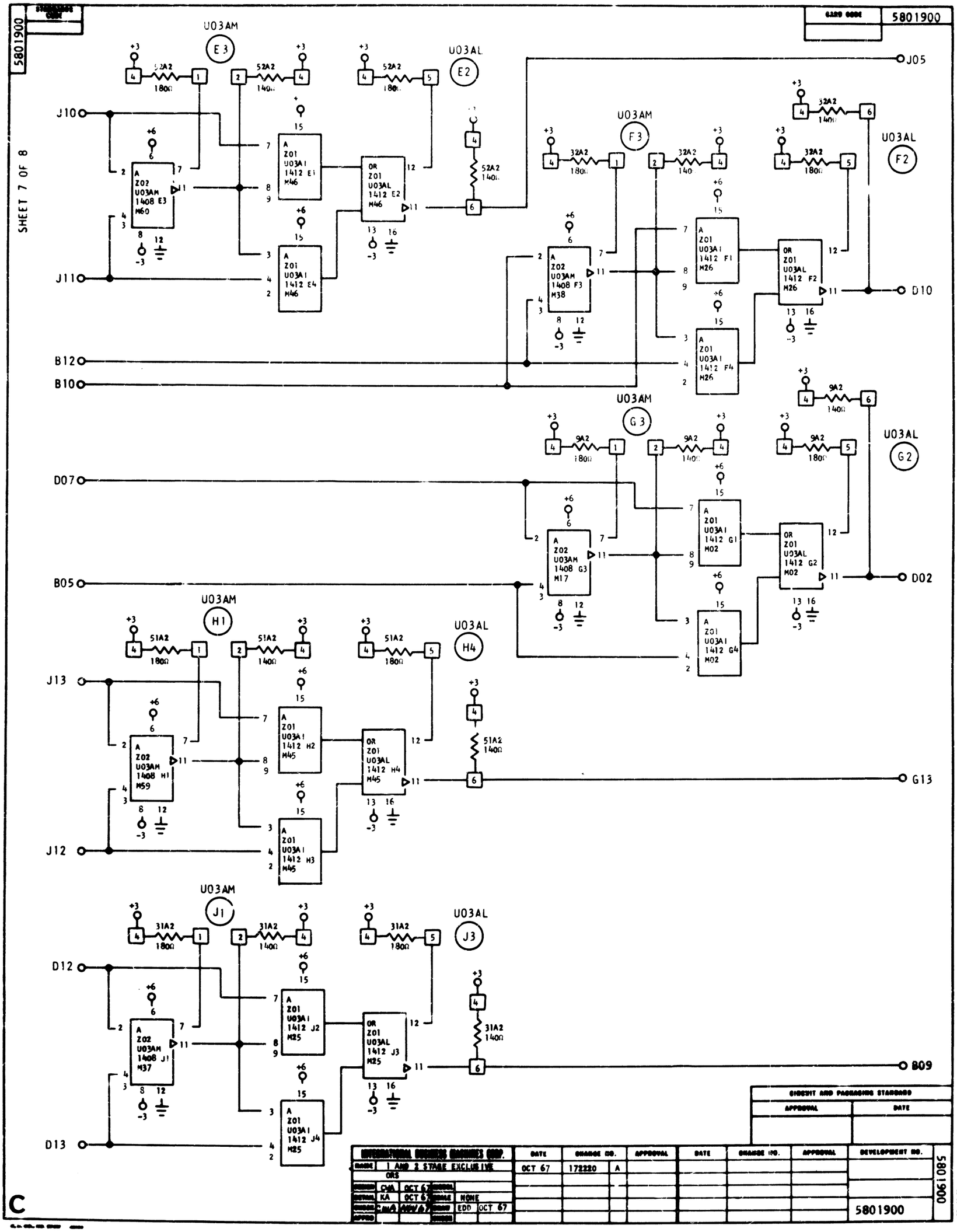
5801900
SHEET 7 OF 8
U03AM
E3
U03AL
E2
J05
J10
J11
B12
B10
U03AM
F3
U03AL
F2
D10
U03AM
G3
U03AL
G2
D07
B05
D02
U03AM
H1
U03AL
H4
J13
J12
G13
U03AM
J1
U03AL
J3
D12
D13
B09
Z02 U03AM 1408 E3 M60
Z01 U03A1 1412 E1 M46
Z01 U03A1 1412 E4 M46
Z01 U03AL 1412 E2 M46
Z02 U03AM 1408 F3 M38
Z01 U03A1 1412 F1 M26
Z01 U03A1 1412 F4 M26
Z01 U03AL 1412 F2 M26
Z02 U03AM 1408 G3 M17
Z01 U03A1 1412 G1 M02
Z01 U03A1 1412 G4 M02
Z01 U03AL 1412 G2 M02
Z02 U03AM 1408 H1 M59
Z01 U03A1 1412 H2 M45
Z01 U03A1 1412 H3 M45
Z01 U03AL 1412 H4 M45
Z02 U03AM 1408 J1 M37
Z01 U03A1 1412 J2 M25
Z01 U03A1 1412 J4 M25
Z01 U03AL 1412 J3 M25
52A2 180Ω
52A2 140Ω
32A2 180Ω
32A2 140Ω
9A2 180Ω
9A2 140Ω
51A2 180Ω
51A2 140Ω
31A2 180Ω
31A2 140Ω
INTERNATIONAL BUSINESS MACHINES CORP.
1 AND 2 STAGE EXCLUSIVE OR
OCT 67
172220
A
NONE
EDD
DEVELOPMENT NO.
5801900
0061085
C