FORM 2-7045-6 (8-63)

STANDARDS CODE	CIRCUIT AND PACKAGING STANDARD		SYM	DATE	CHANGE NO	TECH APPRO	SYM	DATE	CHANGE NO	TECH APPRO	DEVELOPMENT NO	Q/M
2-7045				12OCT67	172208	A						
CARD CODE	APPROVAL	DATE										
1903	PHS	22SEP67									5801903	

SHEET 5 OF 6

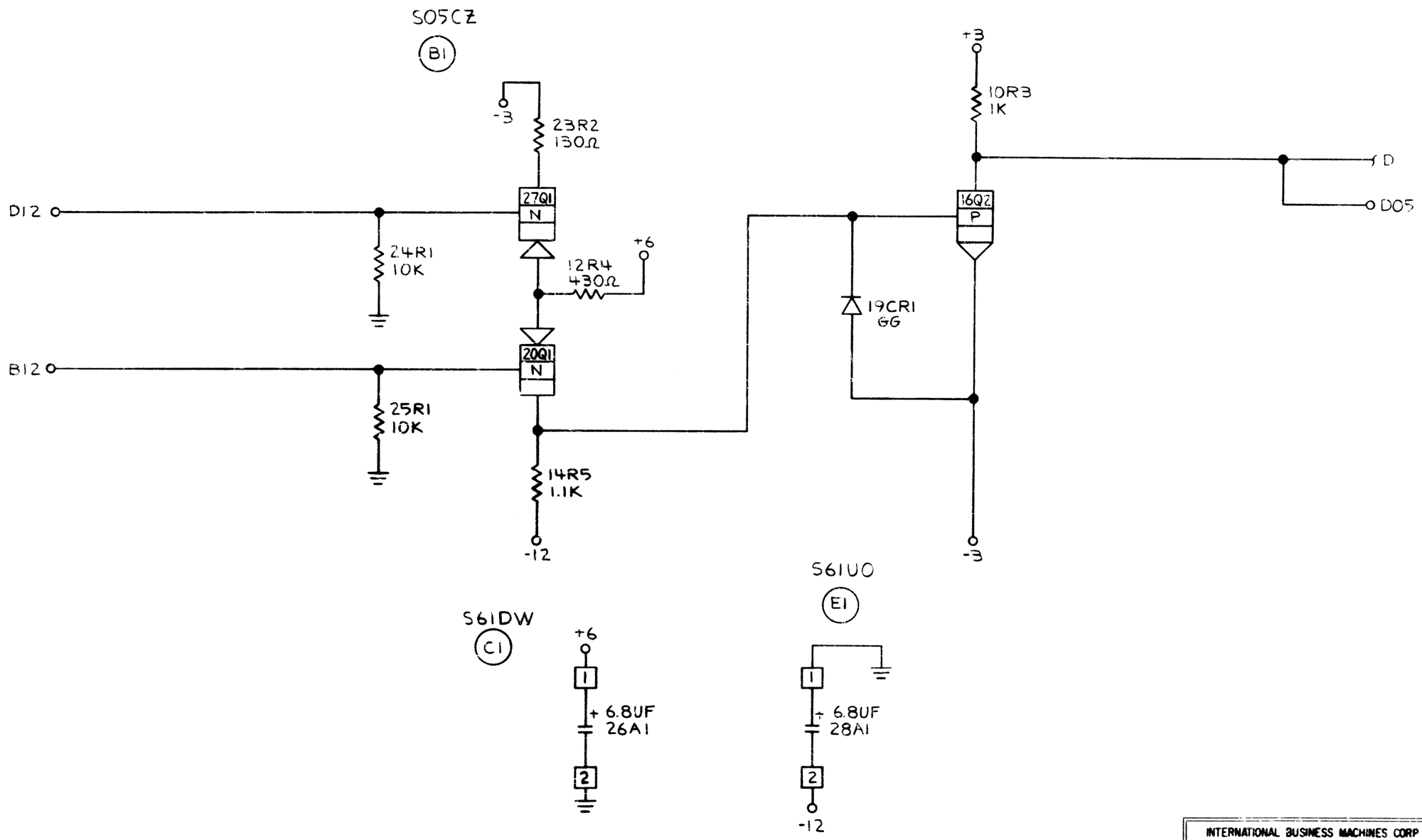

INTERNATIONAL BUSINESS MACHINES CORP				
NAME	CARD ASM – 2 CDC TO SLT			
,ATED RECEIVERS				
DESIGN	R.E.	22SEP67	TYPE	2701
DETAIL	RCE	22SEP67	SCALE	NONE
CHECK	EFC	30CT67	DRAW	CDA 20CT67
APPRO	PHS	22SEP67	CHECK	CDA 20CT67

5801903 C