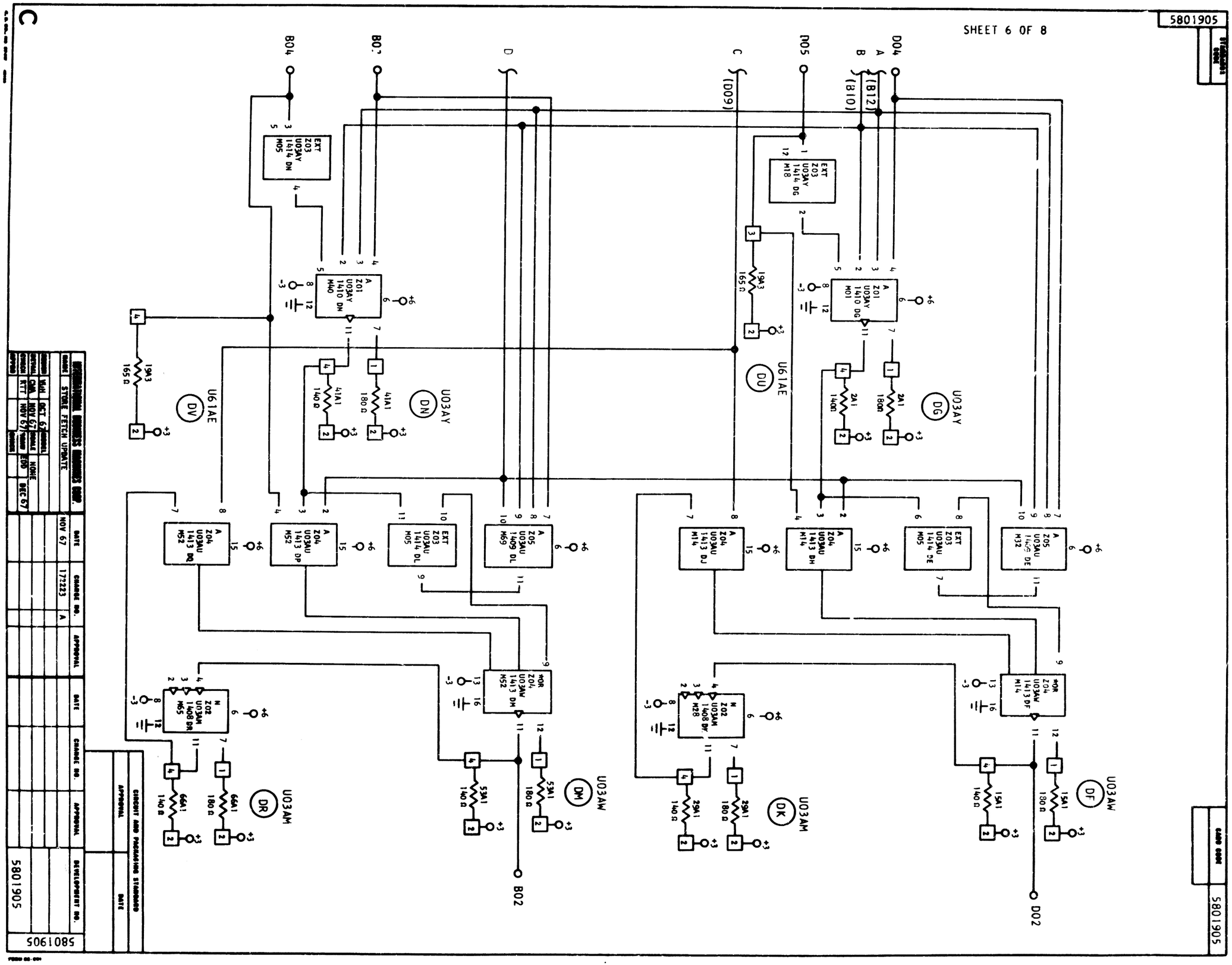
5801905
SHEET 6 OF 8
D04
A
B
(B12)
(B10)
D05
C
(D09)
D
B07
B04
B02
D02
EXT Z03 U03AY 1414 DG M18
EXT Z03 U03AY 1414 DN M05
A Z01 U03AY 1410 DG M01
A Z01 U03AY 1410 DN M40
U03AY DG
U03AY DN
U61AE DU
U61AE DV
A Z05 U03AU 1409 DE M32
EXT Z03 U03AU 1414 DE M05
A Z04 U03AU 1413 BH M14
A Z04 U03AU 1413 DJ M14
A Z04 U03AU 1413 DR M52
A Z04 U03AU 1413 DP M52
EXT Z03 U03AU 1414 DL M05
A Z05 U03AU 1409 DL M69
MOR Z04 U03AW 1413 DF M14
MOR Z04 U03AW 1413 DH M52
N Z02 U03AW 1408 DK M28
N Z02 U03AM 1408 DR M65
U03AW DF
U03AW DM
U03AM DK
U03AM DR
CIRCUIT AND PROGRAMMING STANDARD
STORE FETCH UPDATE
NONE
DEC 67
NOV 67
172223
A
5801905