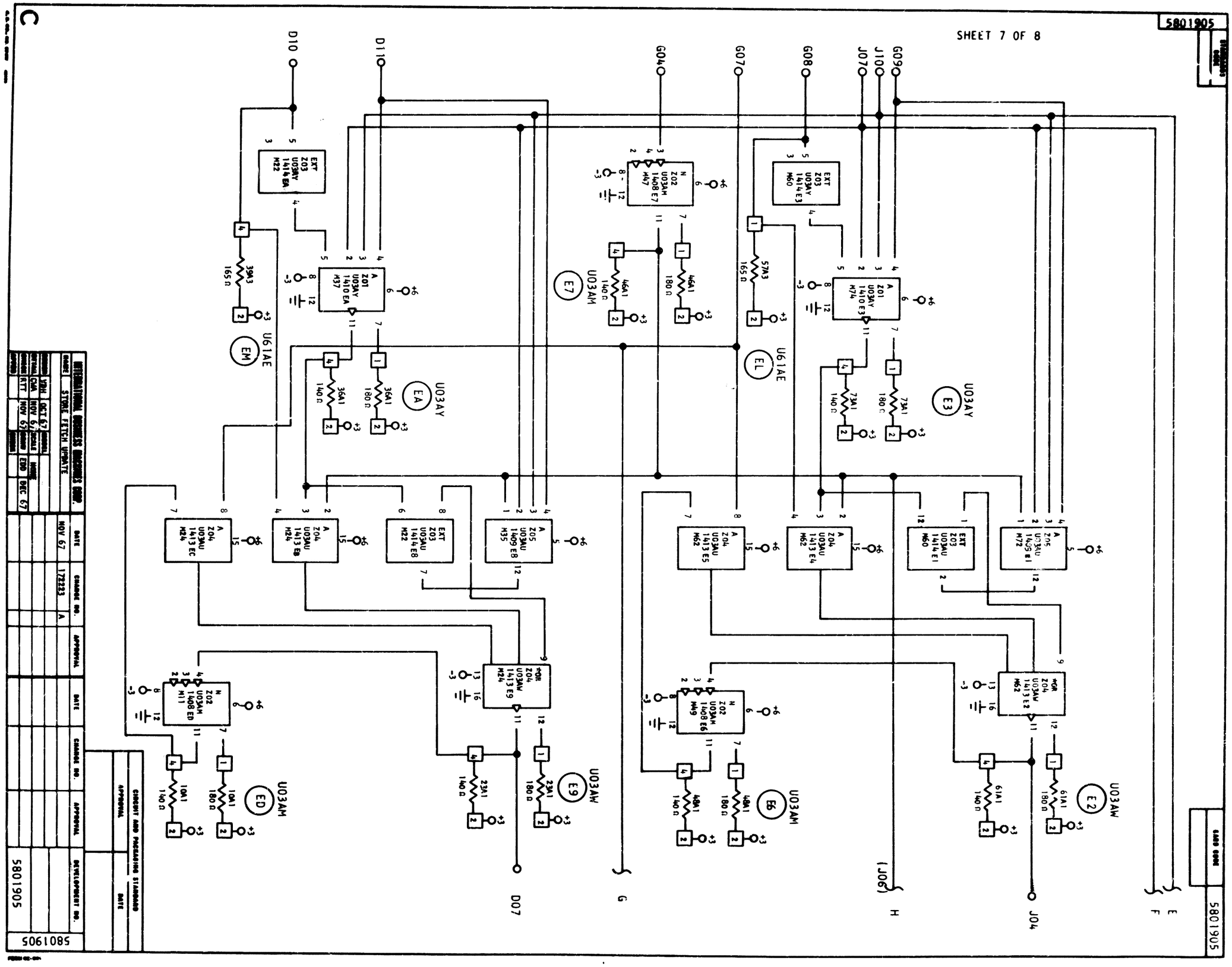
5801905
SHEET 7 OF 8
G09
J10
J07
G08
G07
G04
D11
D10
J06
J04
E
F
G
H
D07
U03AY
E3
U61AE
EL
U03AM
E7
U03AY
EA
U61AE
EM
U03AW
E2
U03AM
E6
U03AW
E9
U03AM
ED
INTERNATIONAL BUSINESS MACHINES CORP.
STORE FETCH UPDATE
CIRCUIT AND PACKAGING STANDARD
5801905