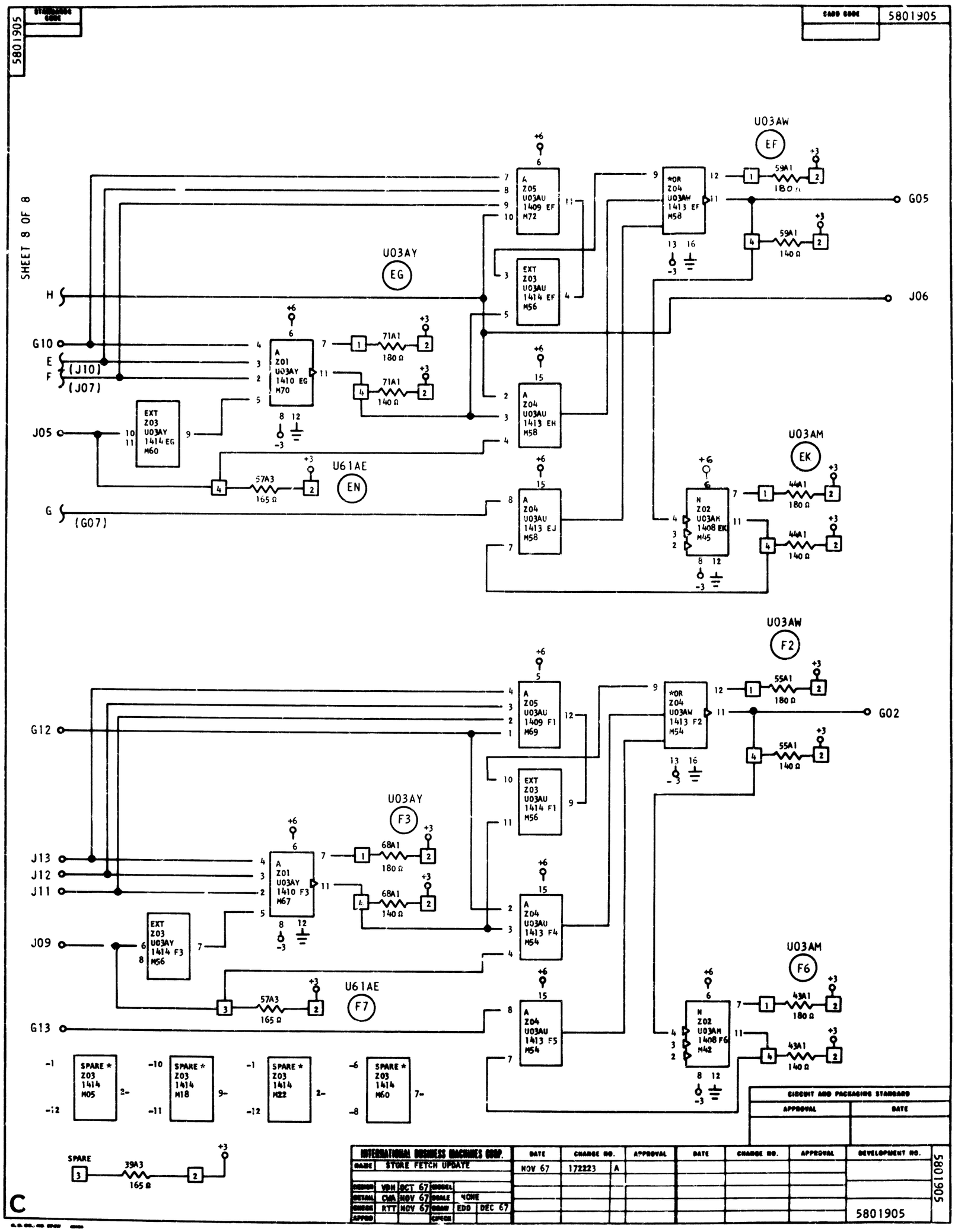
5801905
SHEET 8 OF 8
U03AW
EF
U03AY
EG
U03AM
EK
U61AE
EN
U03AW
F2
U03AY
F3
U03AM
F6
U61AE
F7
G05
J06
G02
H
G10
E
F
(J10)
(J07)
J05
G
(G07)
G12
J13
J12
J11
J09
G13
SPARE
CIRCUIT AND PACKAGING STANDARD
APPROVAL
DATE
INTERNATIONAL BUSINESS MACHINES CORP.
STORE FETCH UPDATE
NOV 67
172223
A
DEC 67
5801905