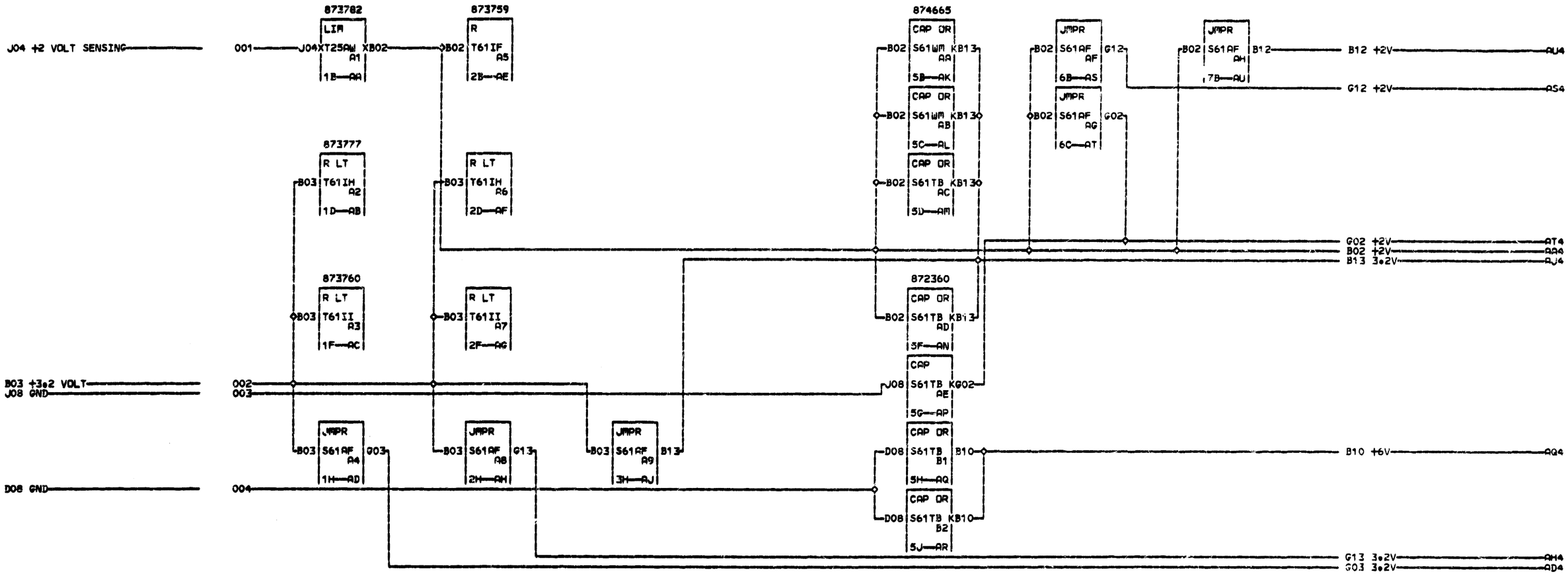

CARD SIZE 2-24 PAC T25
VOLTAGE PINS
1 +6001008110611
9 GND0D070D080J070J08
0 CONTROLLED*
7
1

000

10-12-67 172227 A
02-29-68 173819 B
01-03-69 177186 C

B150-14 MODULE REGULATOR
DATE 01-13-69 MACH. ASSEMBLY
LOG 181 FRAME
CD PG 1 OF 1 P.N. 5801907
IBM CORP. PM BLK. AV

1 9 0 7 1 000