STANDARDS CODE	CIRCUIT AND PACKAGING STANDARD	SYM	DATE	CHANGE NO.	TECH APPRO	SYM	DATE	CHANGE NO.	TECH APPRO	DEVELOPMENT NO.	G/M
2-7040	APPROVAL			173276	A						
CARD CODE	PHS 1/2/68									5801910	
1910											

SHEET 9 OF 14

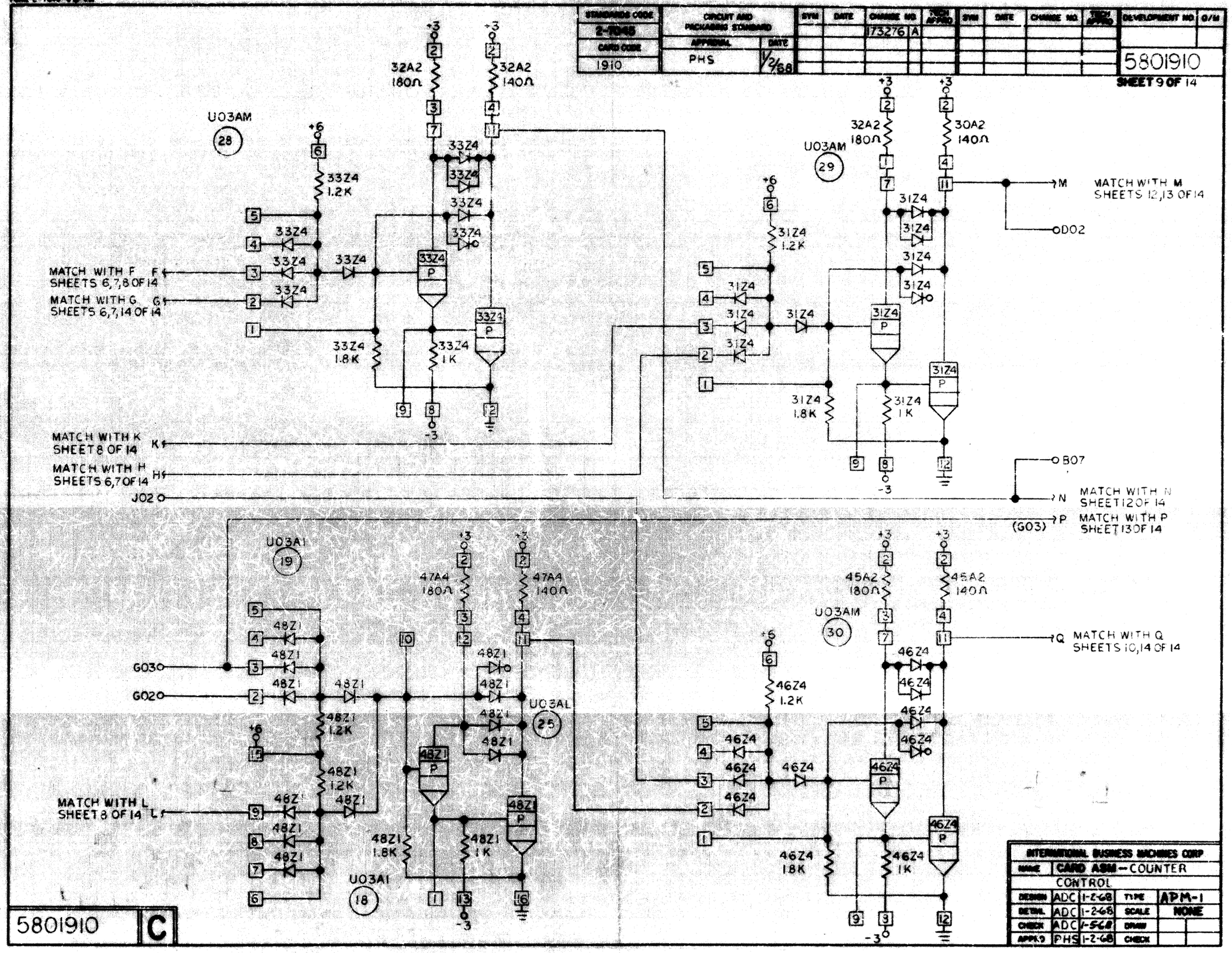

INTERNATIONAL BUSINESS MACHINES CORP				
NAME	CARD ASM—COUNTER CONTROL			
DESIGN	ADC 1-2-68	TYPE	APM-1	
DETAIL	ADC 1-2-68	SCALE	NONE	
CHECK	ADC 1-5-68	DRAW		
APPR'D	PHS 1-2-68	CHECK		

5801910 C