FORM 2-7045-6 (8-63)

STANDARDS CODE	CIRCUIT AND PACKAGING STANDARD		SYM	DATE	CHANGE NO	TECH APPRO	SYM	DATE	CHANGE NO	TECH APPRO	DEVELOPMENT NO	Q/M
2-7045				3-7-68	179817	A						
CARD CODE	APPROVAL	DATE		30 AUG 68	175383	B						
1911	PHS	28FEB68									5801911	

SHEET 20 OF 31

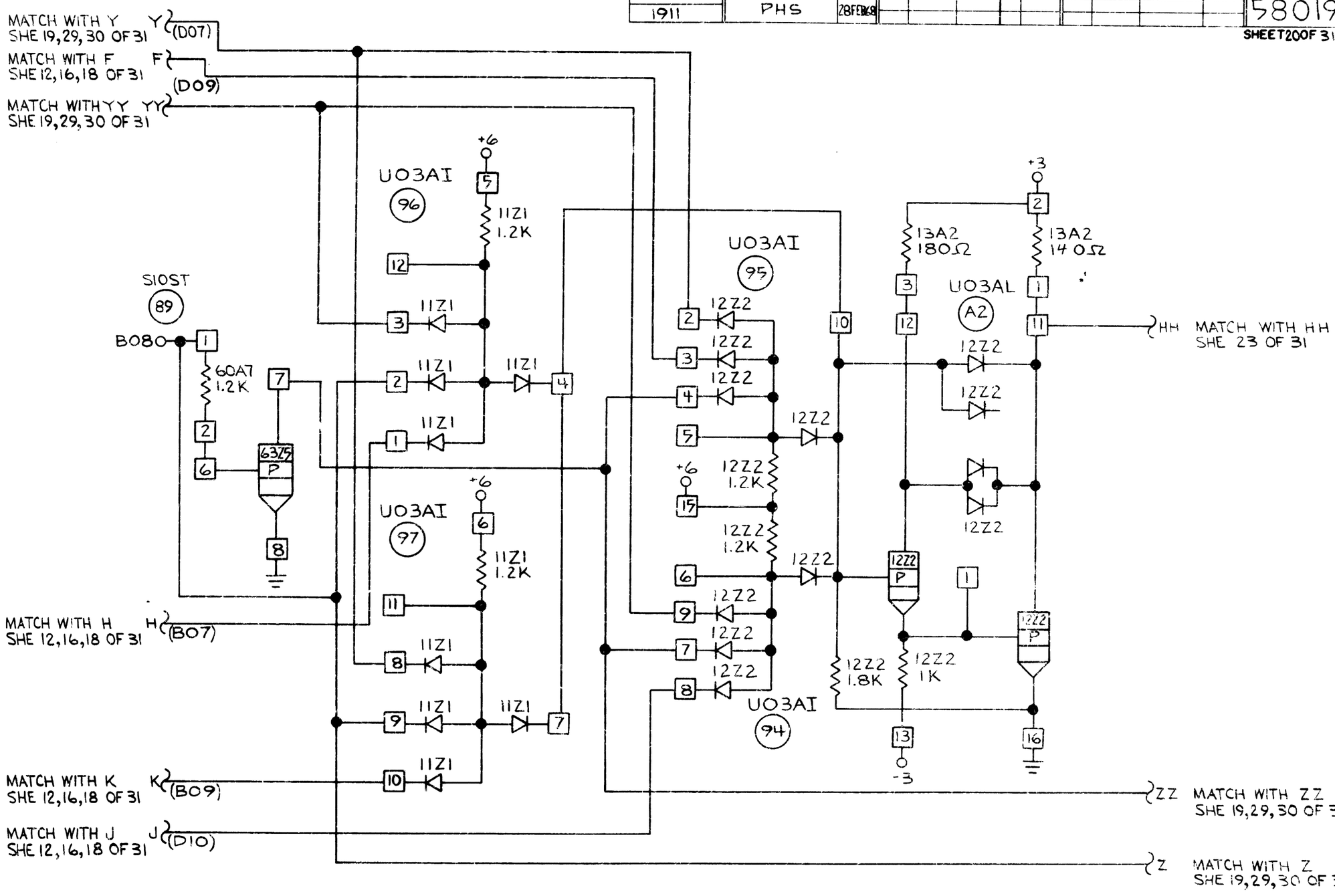

INTERNATIONAL BUSINESS MACHINES CORP				
NAME	CARD ASM - BYTH SELECTION SWITCH			
DESIGN	FAM	28FEB68	TYPE	APM-1
DETAIL	FAM	28FEB68	SCALE	NONE
CHECK			DRAW	CDA 14MAR68
APPRO	PHS	28FEB68	CHECK	CDA 14MAR68

1161085 C