FORM 2-7045-6 (8-63)

STANDARDS CODE	CIRCUIT AND PACKAGING STANDARD		SYM	DATE	CHANGE NO	TECH APPRO	SYM	DATE	CHANGE NO	TECH APPRO	DEVELOPMENT NO	Q/M
2-7045				3-7-68	179817	A						
CARD CODE	APPROVAL	DATE		30AUG68	175383	B					5801911	
1911	PHS	28FEB68										

SHEET 23 OF 31

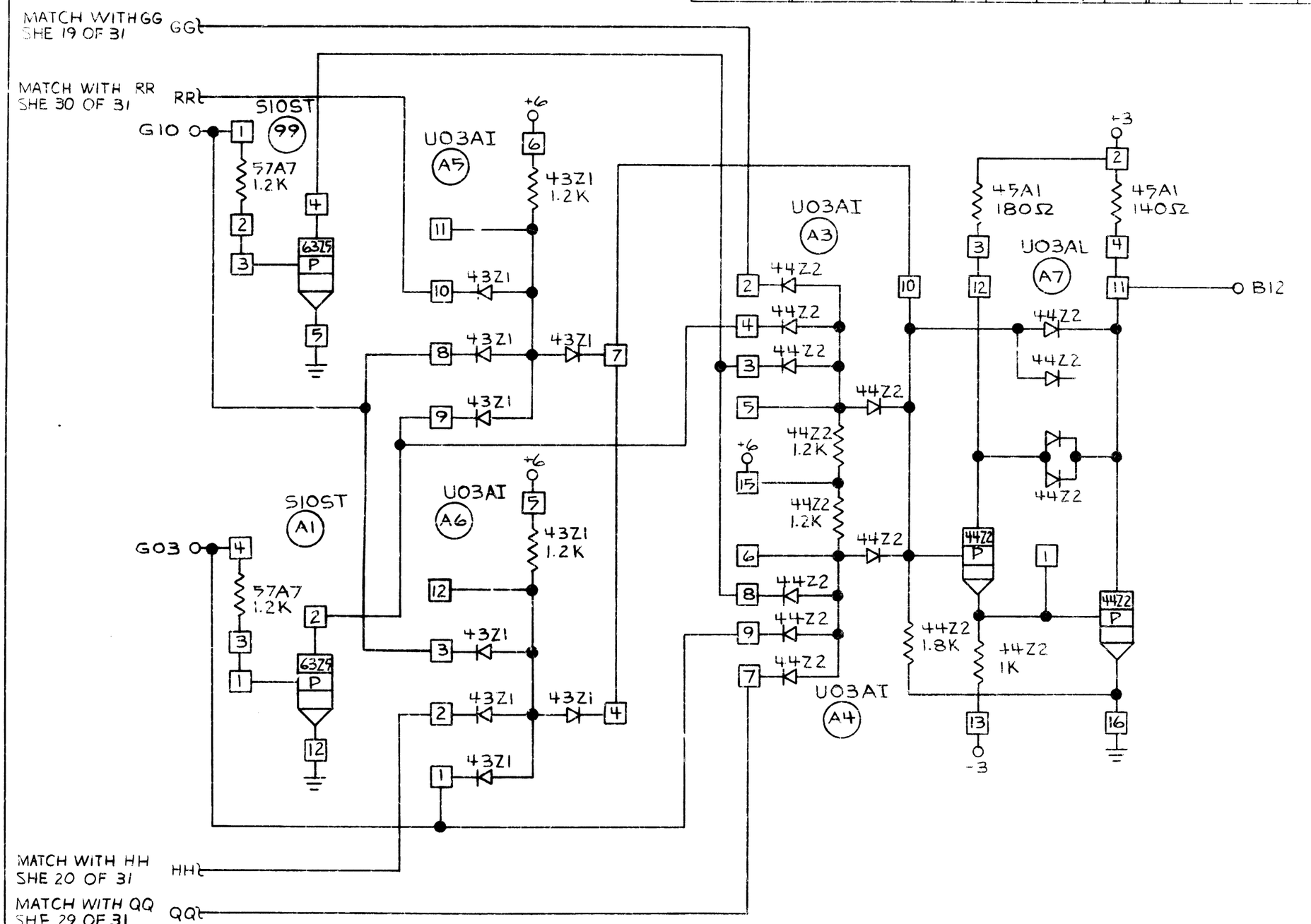

1161085 C

INTERNATIONAL BUSINESS MACHINES CORP					
NAME	CARD ASM - BYTH SELECTION SWITCH				
DESIGN	FAM	28FEB68	TYPE	APM-1	
DETAIL	FAM	28FEB68	SCALE	NONE	
CHECK			DRAW	CDA	7MAR68
APPRO	PHS	28FEB68	CHECK	CDA	7MAR68