FORM 2-7045-6 (8-63)

STANDARDS CODE	CIRCUIT AND PACKAGING STANDARD		SYM	DATE	CHANGE NO	TECH APPRO	SYM	DATE	CHANGE NO	TECH APPRO	DEVELOPMENT NO	Q/M
2-7045				3-7-68	179811	A						
CARD CODE	APPROVAL	DATE		30AUG68	179383	B					5801911	
1911	PHS	28FEB68										

SHEET 29 OF 31

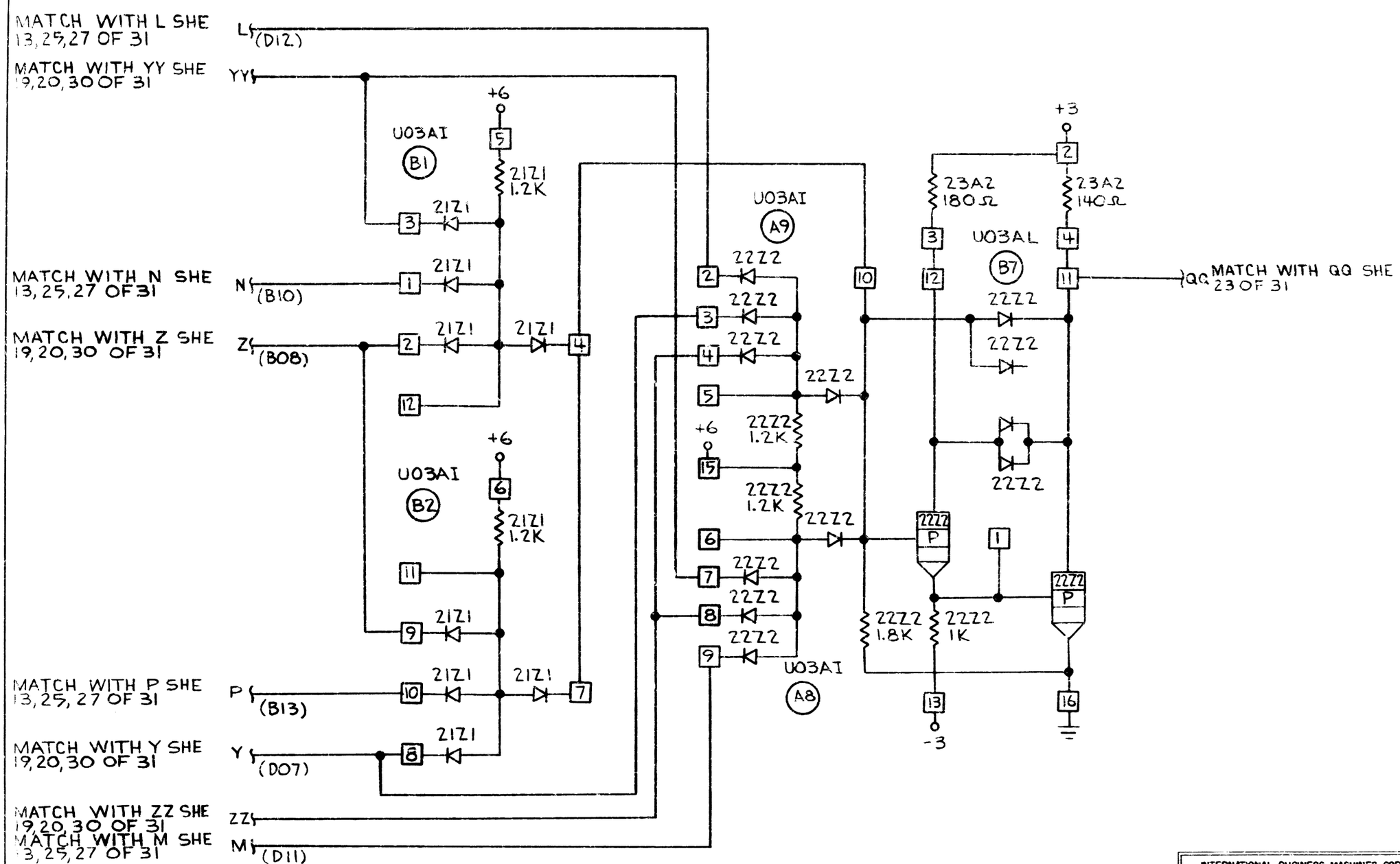

1161085 C

INTERNATIONAL BUSINESS MACHINES CORP				
NAME	CARD ASM - BYTH SELECTION SWITCH			
DESIGN	FAM 28FEB68		TYPE	AMP-1
DETAIL	FAM 28FEB68		SCALE	NONE
CHECK			DRAW	CDA 4MAR68
APPRO	PHS 28FEB68		CHECK	CDA 4MAR68