THIS BLD HAS BEEN HAND CHECKED AGAINST THE WIRING

SHEET 01 OF 5

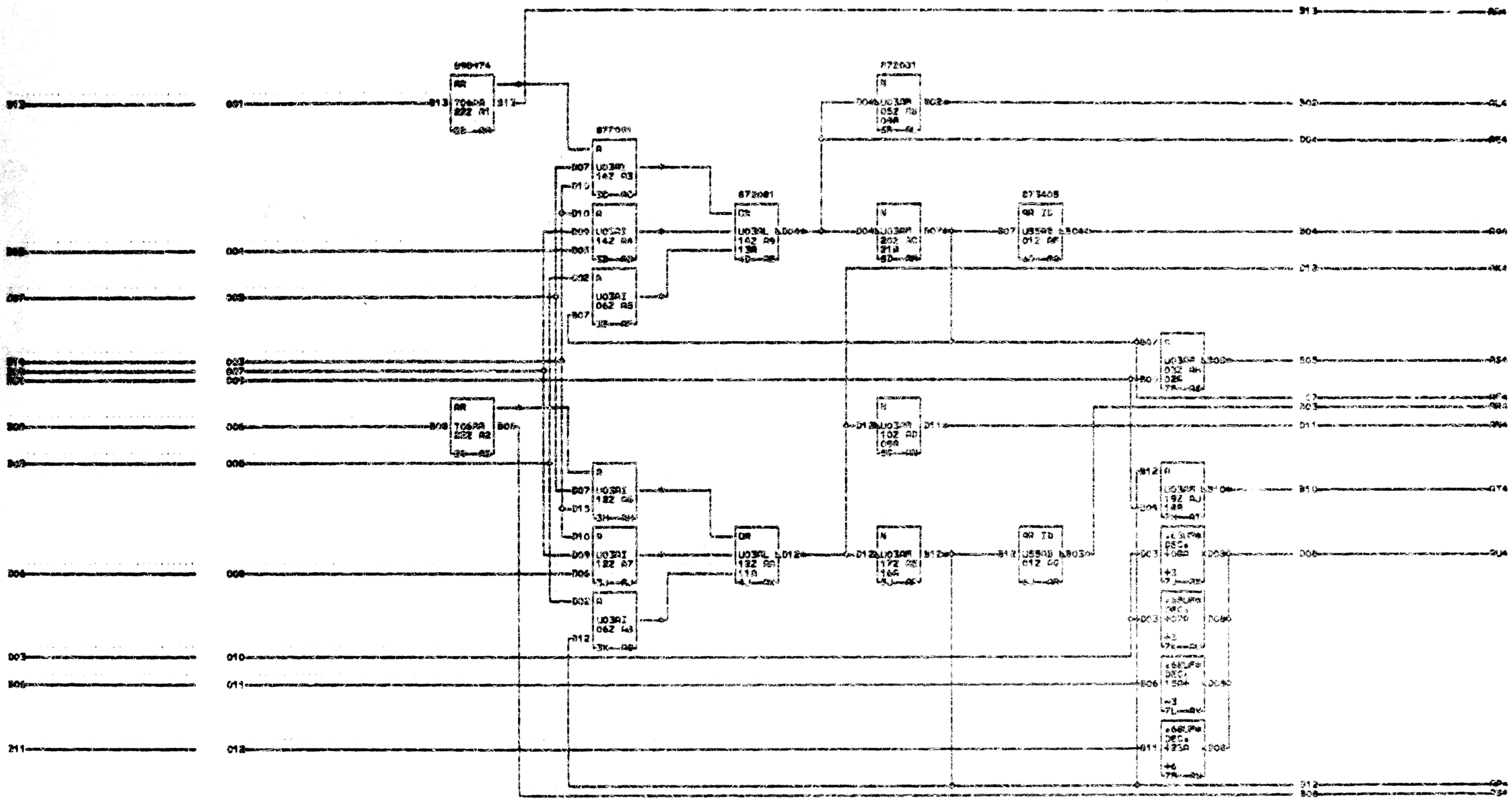

CORE SIZE= 1-12 PRC
VOLTAGE PINS
+6V@011 +3V@001
-3V@006 GND@008
STANDARD RESTRICTED

RESTRICTED

3-BURY RCI LATCHES
DATE 09-22-64 MACH. ASSEMBLY
LOG 120 FRAME
10 PW 1 OF 1 P.N. 5803003