| STANDARD CODE | CIRCUIT AND PACKAGING STANDARD | | DWG | DATE | CHANGE NO. | | DWG | DATE | CHANGE NO. | | DEVELOPMENT NO. | QTY |
|---|---|---|---|---|---|---|---|---|---|---|---|---|
| 2-7040 | APPROVAL | DATE | | | | | | | | | | |
| CARD CODE | | | | | | | | | | | | |
| 3005 | | | | | | | | | | | 5803005 | |

SHEET 4 OF 5

RESTRICTED

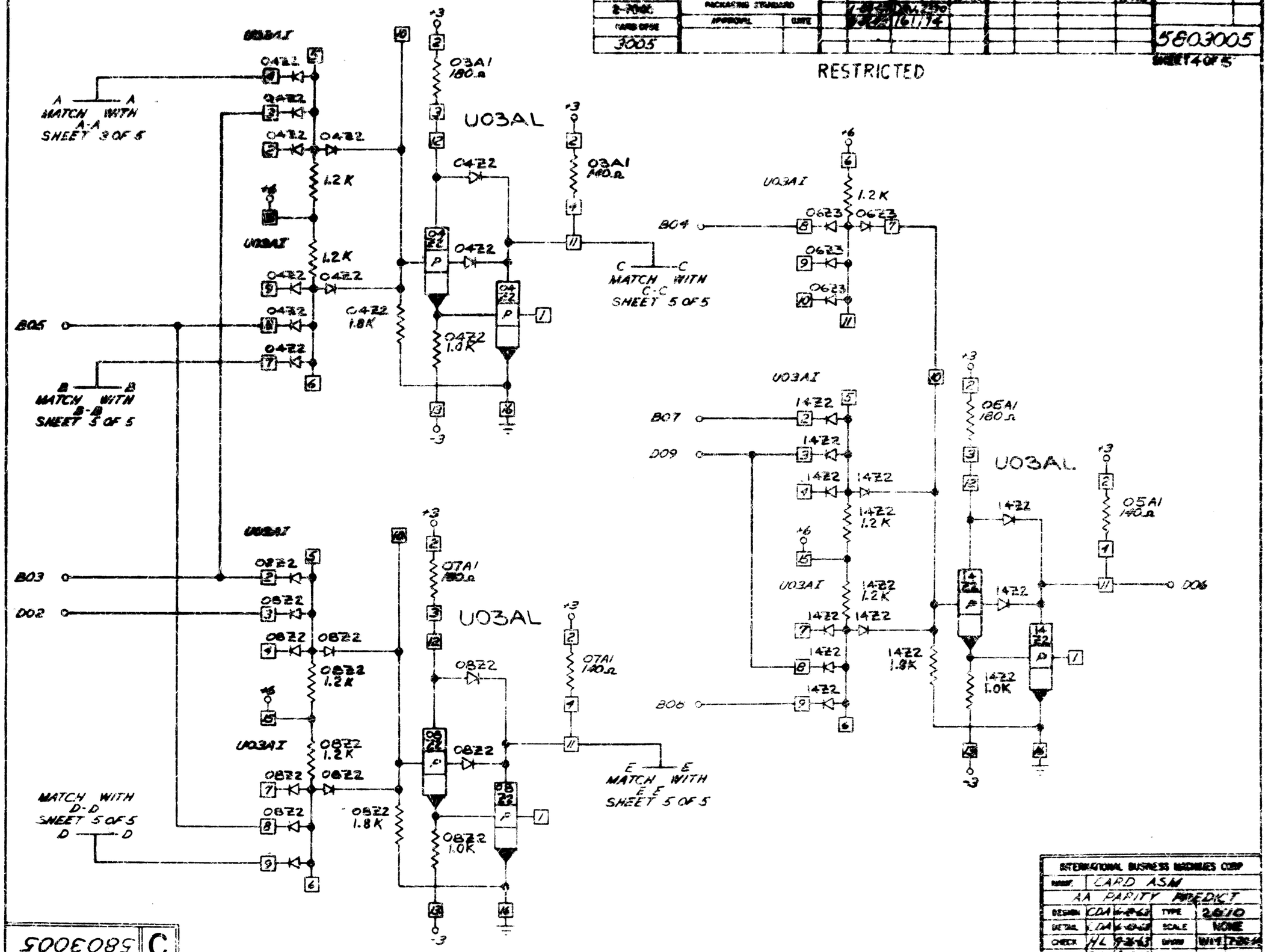


| INTERNATIONAL BUSINESS MACHINES CORP | | | |
|---|---|---|---|
| NAME | CARD ASM | | |
| AA PARITY PREDICT | | | |
| DESIGN | CDA | TYPE | 2610 |
| DETAIL | CDA | SCALE | NONE |
| CHECK | HL | DRAWN | |
| APPROVED | | CHECK | |

5803005 C