STANDARDS CODE 2-7045

5803022

CARD CODE 5803022

SHEET 3 OF 3

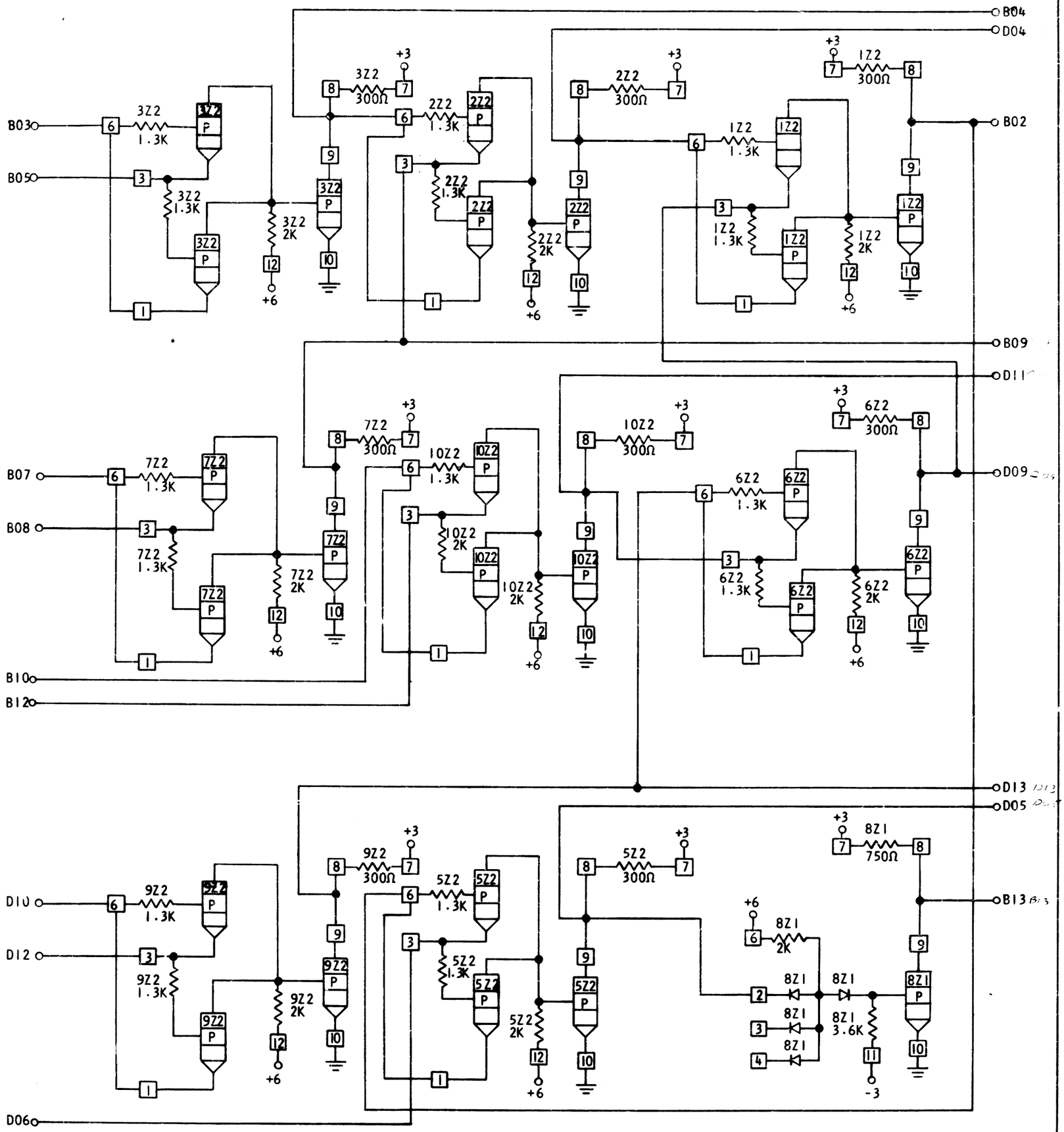

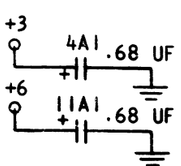

CIRCUIT AND PACKAGING STANDARD	
APPROVAL	DATE

INTERNATIONAL BUSINESS MACHINES CORP.																	
NAME	CARD ASM NINE BIT PARITY CHECK																
DESIGN				MODEL													
DETAIL				SCALE	NONE												
CHECK				DRAW	VMD 1/7/64												
APPRO				CHECK													

DATE	CHANGE NO.	APPROVAL	DATE	CHANGE NO.	APPROVAL	DEVELOPMENT NO.
6/29/63	DEV 1239					SE-0097
9/12/63	DEV 1613					
8/5/64	DEV 161114					

5803022

C

C. D. CO., NO. 97-0W 48106