5803025

STANDARDS CODE 2-7045

CARD CODE 5803025

SHEET 5 OF 7

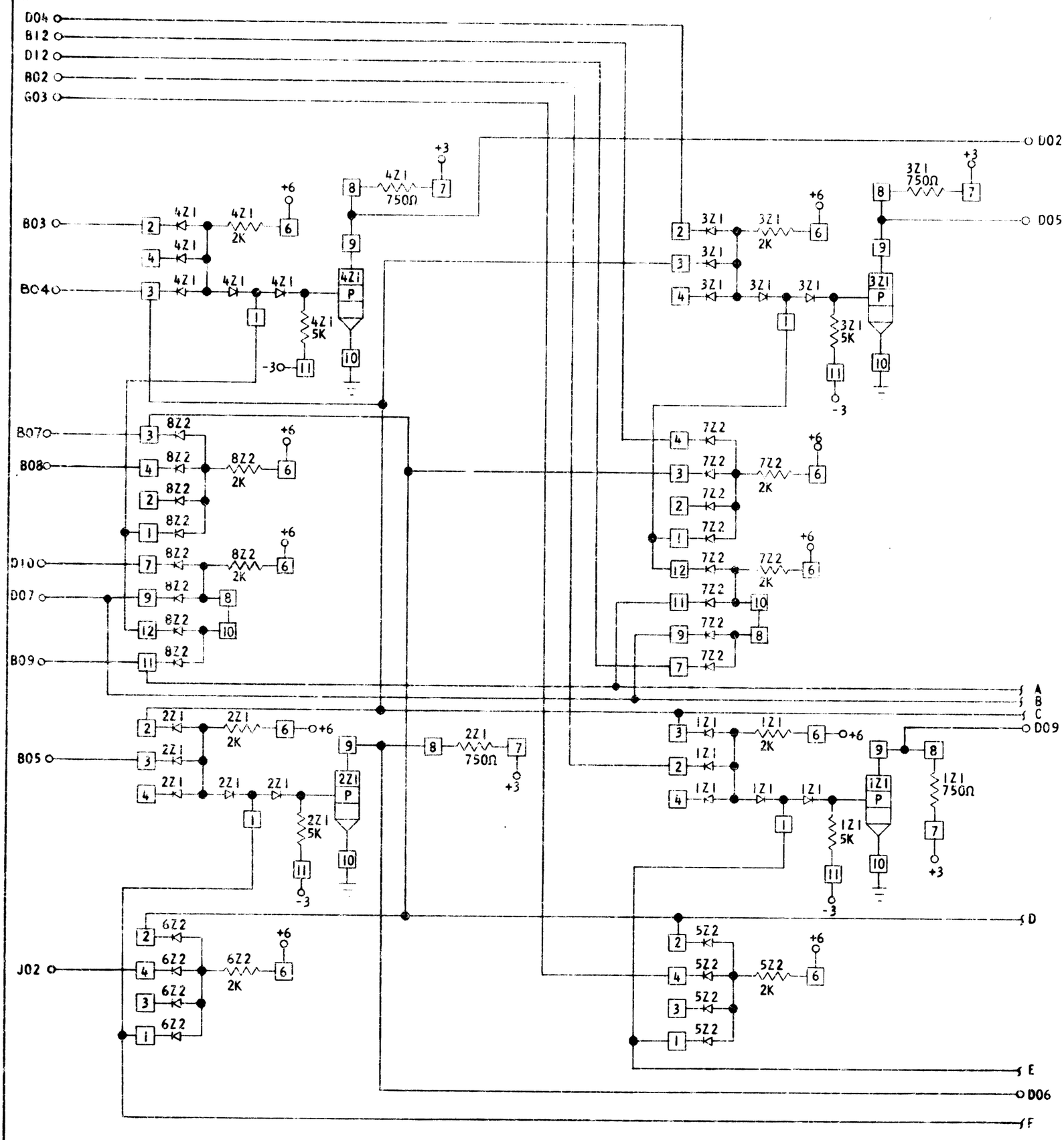

CIRCUIT AND PACKAGING STANDARD	
APPROVAL	DATE

INTERNATIONAL BUSINESS MACHINES CORP.														
NAME	3 INPUT ASSEMBLER WITH LOAD				DATE	CHANGE NO.	APPROVAL	DATE	CHANGE NO.	APPROVAL	DEVELOPMENT NO	5803025
DESIGN			MODEL		7-12-63	DEV 1381						
DETAIL	LRN	3-4-63	SCALE	NONE	12-30-63	DEV 2214						
CHECK	PEH	3-6-64	DRAW	MDEL 1-6-64	2-5-64	DEV 2451						
APPRO	4EM	3-16-64	CHECK	TH 11-8-64	3-25-64	160070						

C