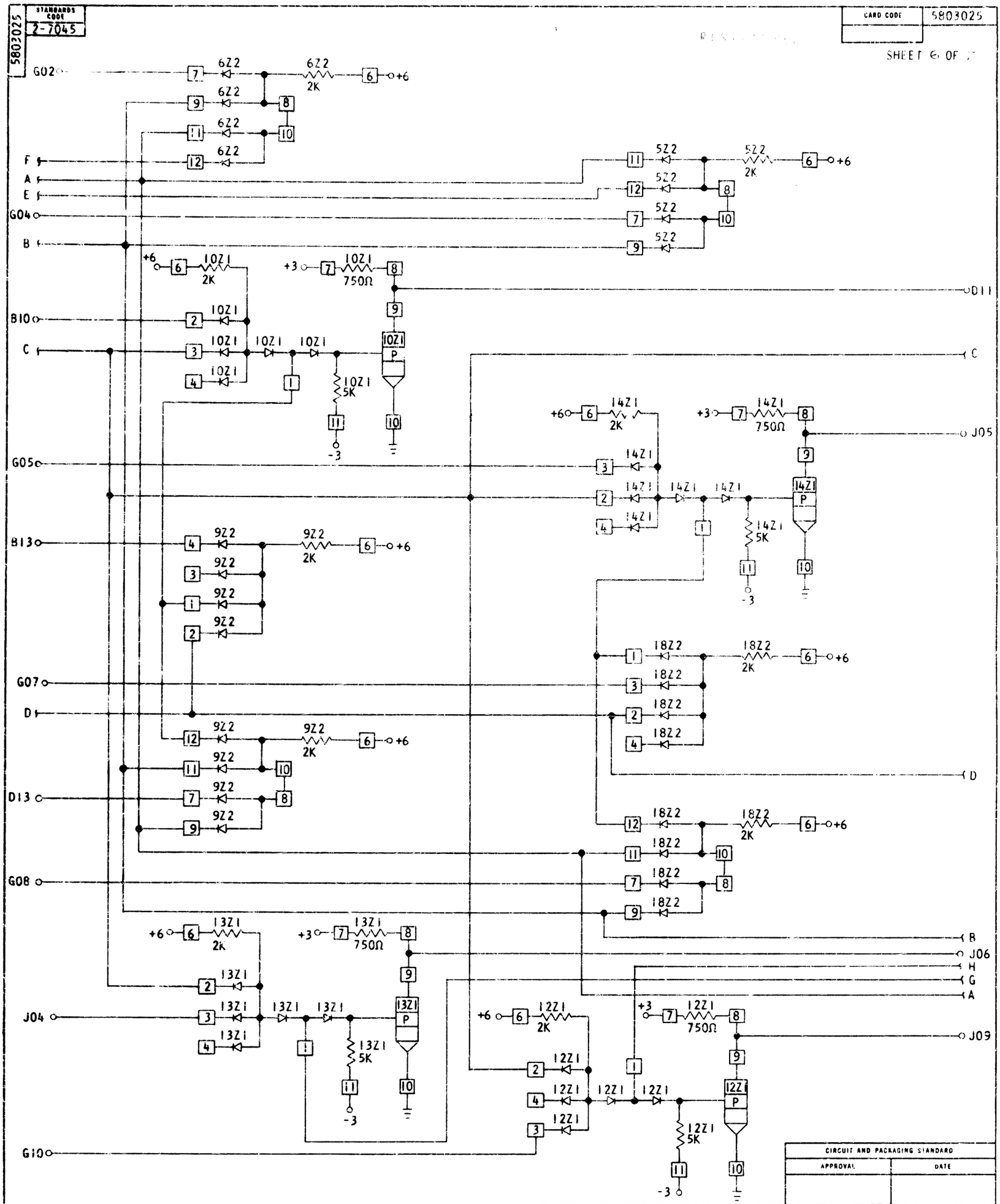

CIRCUIT AND PACKAGING STANDARD	
APPROVAL	DATE

INTERNATIONAL BUSINESS MACHINES CORP.														
NAME	3 INPUT ASSEMBLER					DATE	CHANGE NO.	APPROVAL	DATE	CHANGE NO.	APPROVAL	DEVELOPMENT NO.	5803025
	WITH LOAD					7-12-63	DEV 1381						
DESIGN			MODEL			12-30-63	DEV 2214						
DETAIL	LRNB-1463		SCALE	NONE		2-5-64	DEV 2451						
CHECK	PEH		DRAW	MDE 1-7-64		3-25-64	160070						
APPRO			CHECK	TH 1-8-64									

C