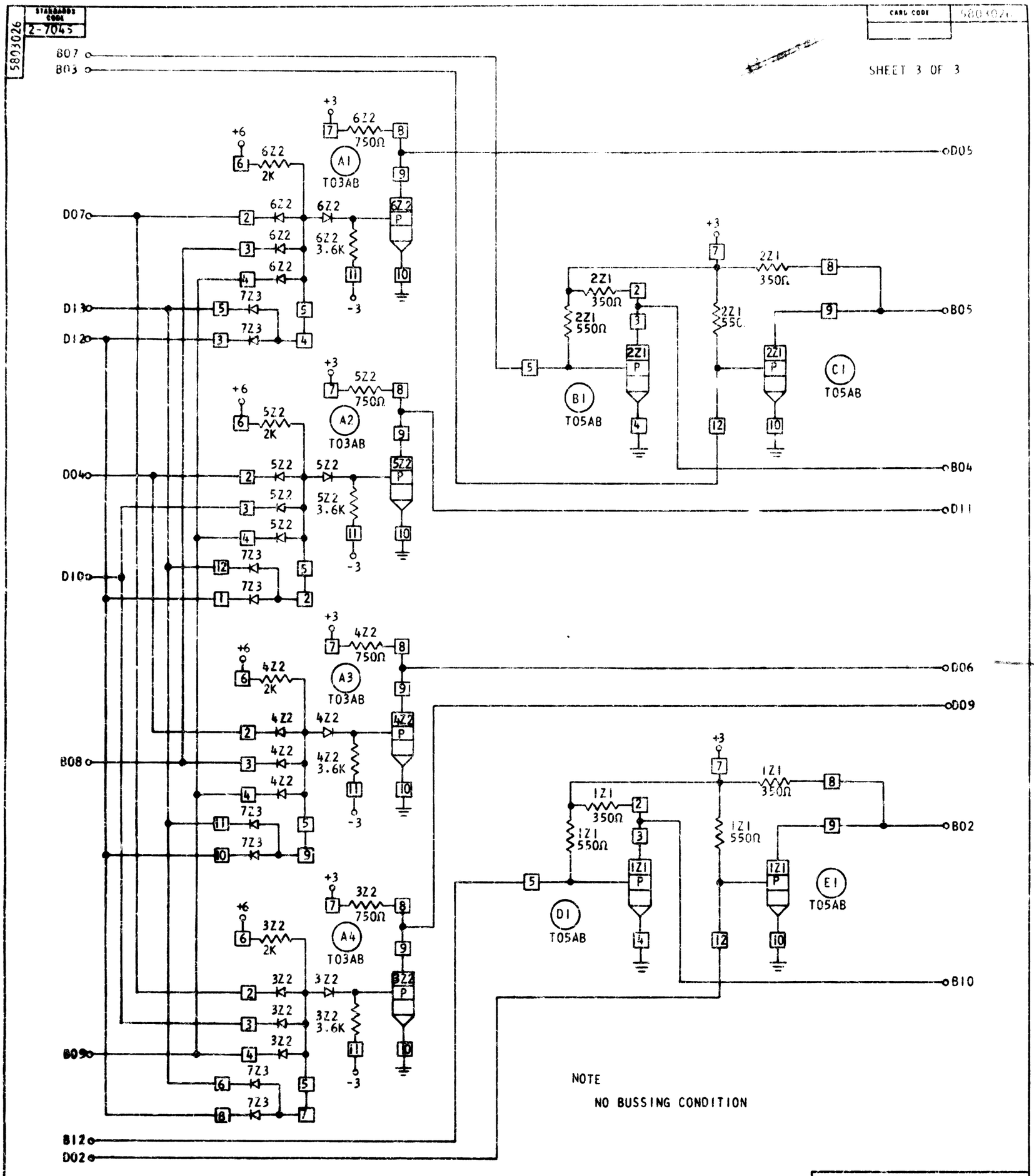
5803026
STANDARDS CODE 2-7045
CARD CODE 5803026
SHEET 3 OF 3
B07
B03
D05
D07
D13
D12
B05
B04
D11
D04
D10
D06
D09
B08
B02
B10
B09
B12
D02
A1 T03AB
A2 T03AB
A3 T03AB
A4 T03AB
B1 T05AB
C1 T05AB
D1 T05AB
E1 T05AB
6Z2 750Ω
6Z2 2K
6Z2 3.6K
7Z3
5Z2 750Ω
5Z2 2K
5Z2 3.6K
4Z2 750Ω
4Z2 2K
4Z2 3.6K
3Z2 750Ω
3Z2 2K
3Z2 3.6K
2Z1 350Ω
2Z1 550Ω
1Z1 350Ω
1Z1 550Ω
+3
+6
-3
NOTE
NO BUSSING CONDITION
CIRCUIT AND PACKAGING STANDARD
APPROVAL
DATE
INTERNATIONAL BUSINESS MACHINES CORP.
NAME CARD ASM-CODER 2-5 BITS
DATE
CHANGE NO.
APPROVAL
DEVELOPMENT NO.
DEV 1391
DEV 1699
DEV 1833
17JUL67
171710C
5803026
C