CARD CODE 3034

SHEET 3 OF 3

RESTRICTED

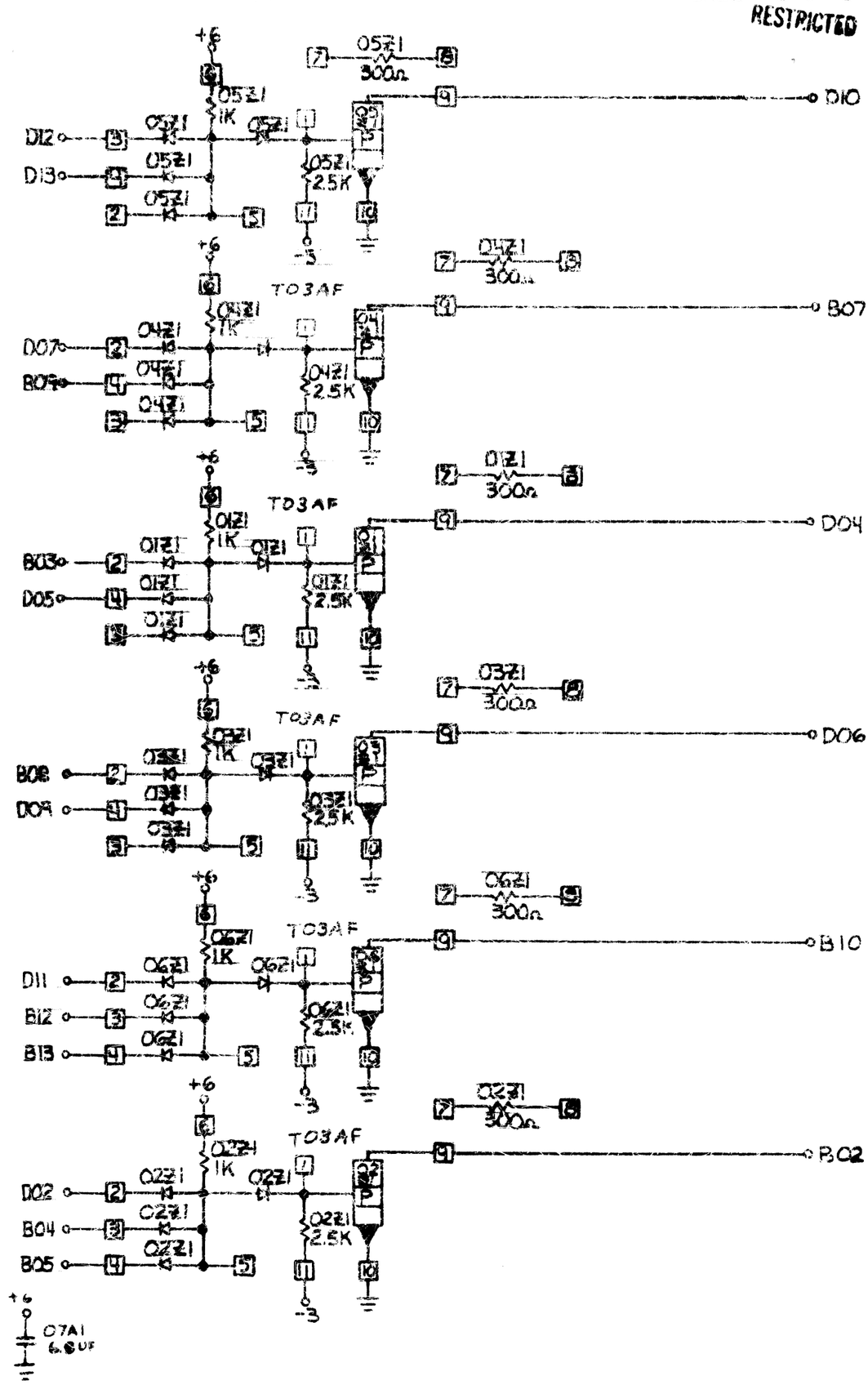


| CIRCUIT & PACK. SYMBOL | |
|---|---|
| APRV'L | DATE |
| J.R. Otten | 6-14-65 |

| INTERNATIONAL BUSINESS MACHINES CORP | DATE | CHANGE NO | DATE | CHANGE NO. | NOTE | DEVELOPMENT NO. |
|---|---|---|---|---|---|---|
| NAME 2 3WAY & 4 2WAY | 6-17-65 | 65 982 | | | 1 PRINT TO ENG. SPEC. NO. | 5[redacted]34 |
| 6 POWER INVERTER | | | | | | |
| DRAWN N. [illegible] | | | | | | |
| DETAIL [illegible] | | | | | | |
| CHECK [illegible] | | | | | | |
| APPROVED [illegible] | | | | | | |

5803034