STANDARDS CODE 7045

CARD CODE 5803036

RESTRICTED

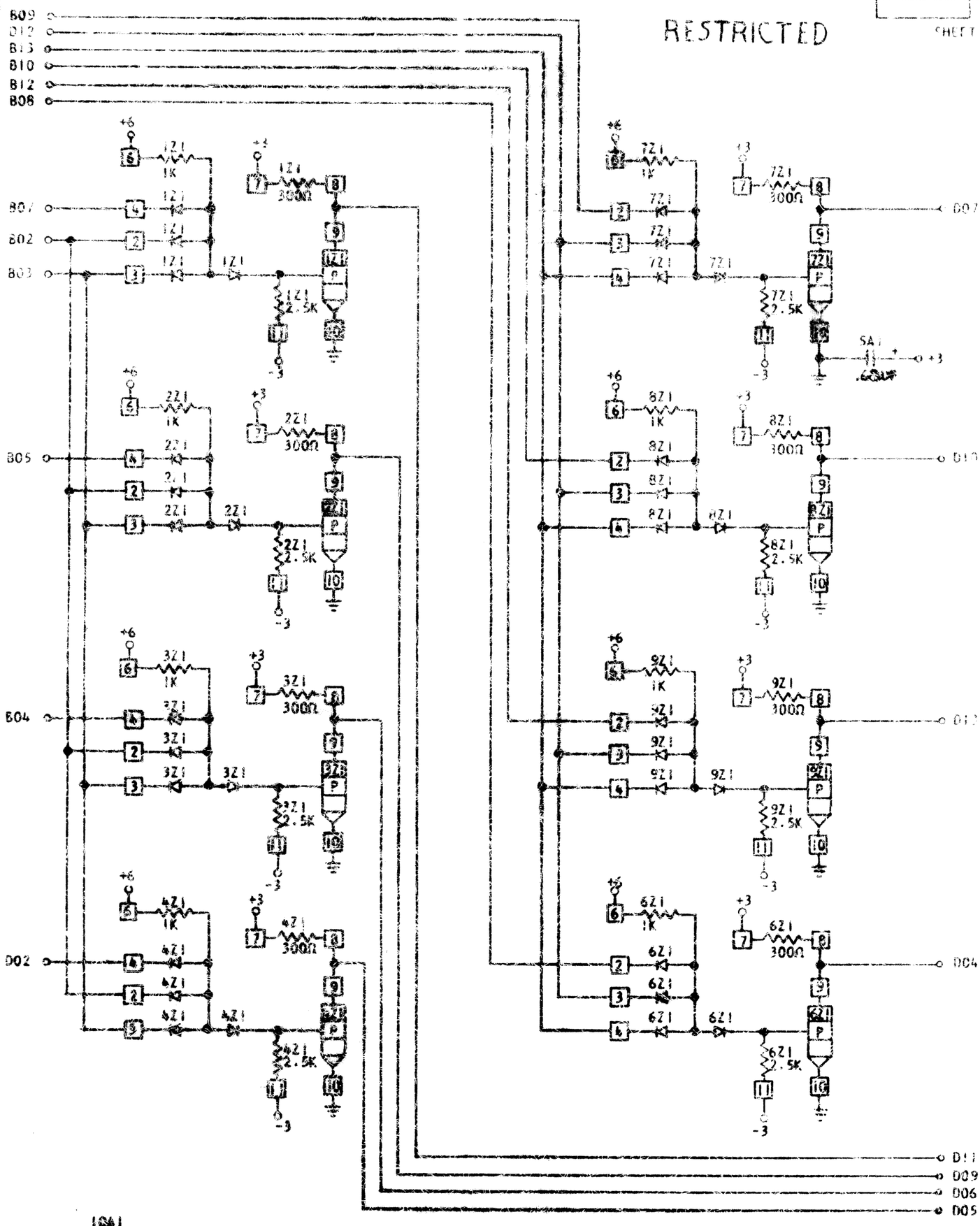


CIRCUIT AND PACKAGING STANDARD

| APPROVAL | DATE |
|---|---|
| | |

| DATE | CHANGE NO. | APPROVAL | DATE | CHANGE NO. | APPROVAL | DEVELOPMENT NO. |
|---|---|---|---|---|---|---|
| [redacted] | REV 1239 | | | | | |
| [redacted] | 16-0034 | | | | | |

5803036

C