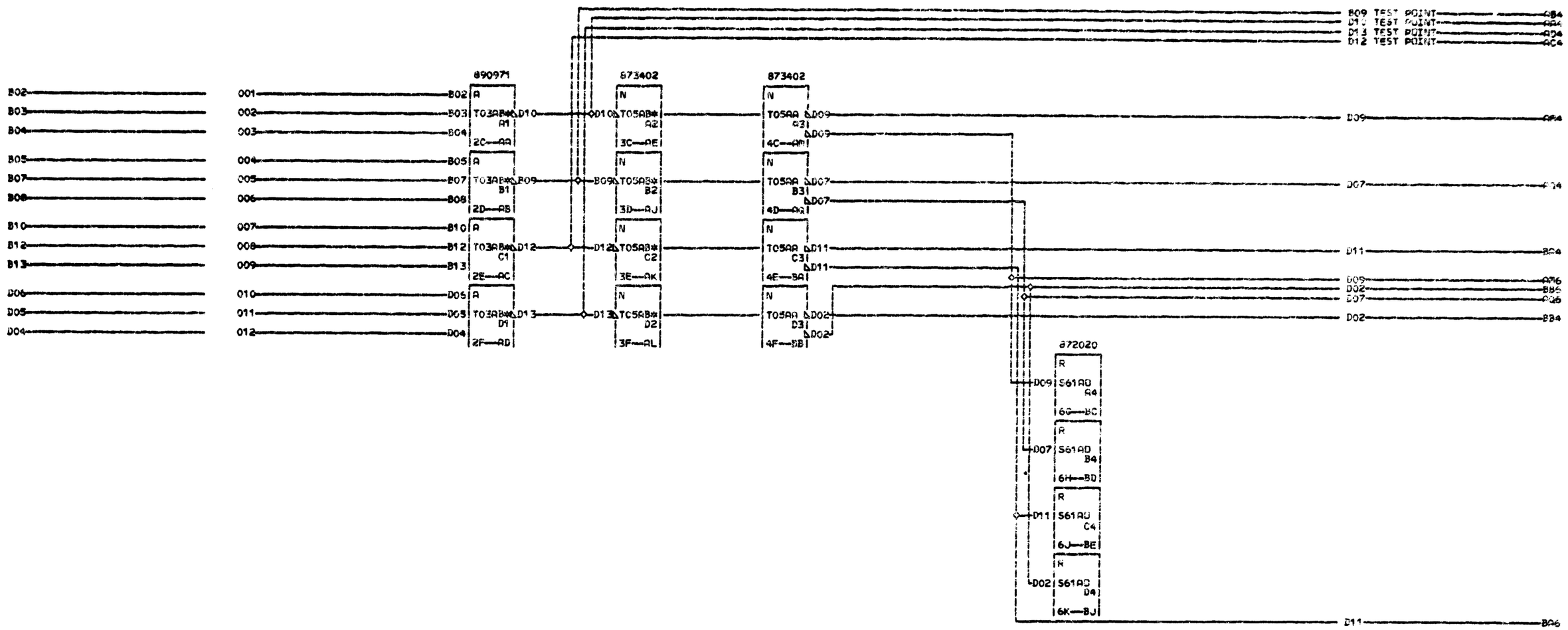

S
X
R
S

0
0
0

P
A
G
E
S

CARD SIZED 1-12 PAC T06
VOLTAGE PINS
3 +6R0811 +3V0D03
0 -3V0806 GND0D08
3 SPECIAL RESTRICTED
9
1

P
R
I
N
T
E
D

000

0
0
2

04-27-64 DEV1382
07-16-64 DEV3543
11-30-64 161278
03-16-65 163721 B
01-31-67 169843 C

4 NPL MULTIPLEX LINE DRIVERS
TERMINATED
DATE 01-30-67 MACH. ASSEMBLY
LOG 3115 FRAME
L D MOVE P.N. 5803039
IBM CORP. ED BLK. BK

3
0
3
9
1
000