FORM 2-7045-5 (9-63)

STANDARDS CODE	CIRCUIT AND PACKAGING STANDARD		SYM	DATE	CHANGE NO.	TECH APPRO	SYM	DATE	CHANGE NO.	TECH APPRO	DEVELOPMENT NO.	G/N
2-7045				9-16-63	DRV 1568							
CARD CODE	APPROVAL	DATE		11-1-63	DRV 1699							
3043	GHM	2-16-65		3-12-65	DE 4968						5803045	
				4-23-65	163811 IA							

SHEET 6 OF 6

RESTRICTED

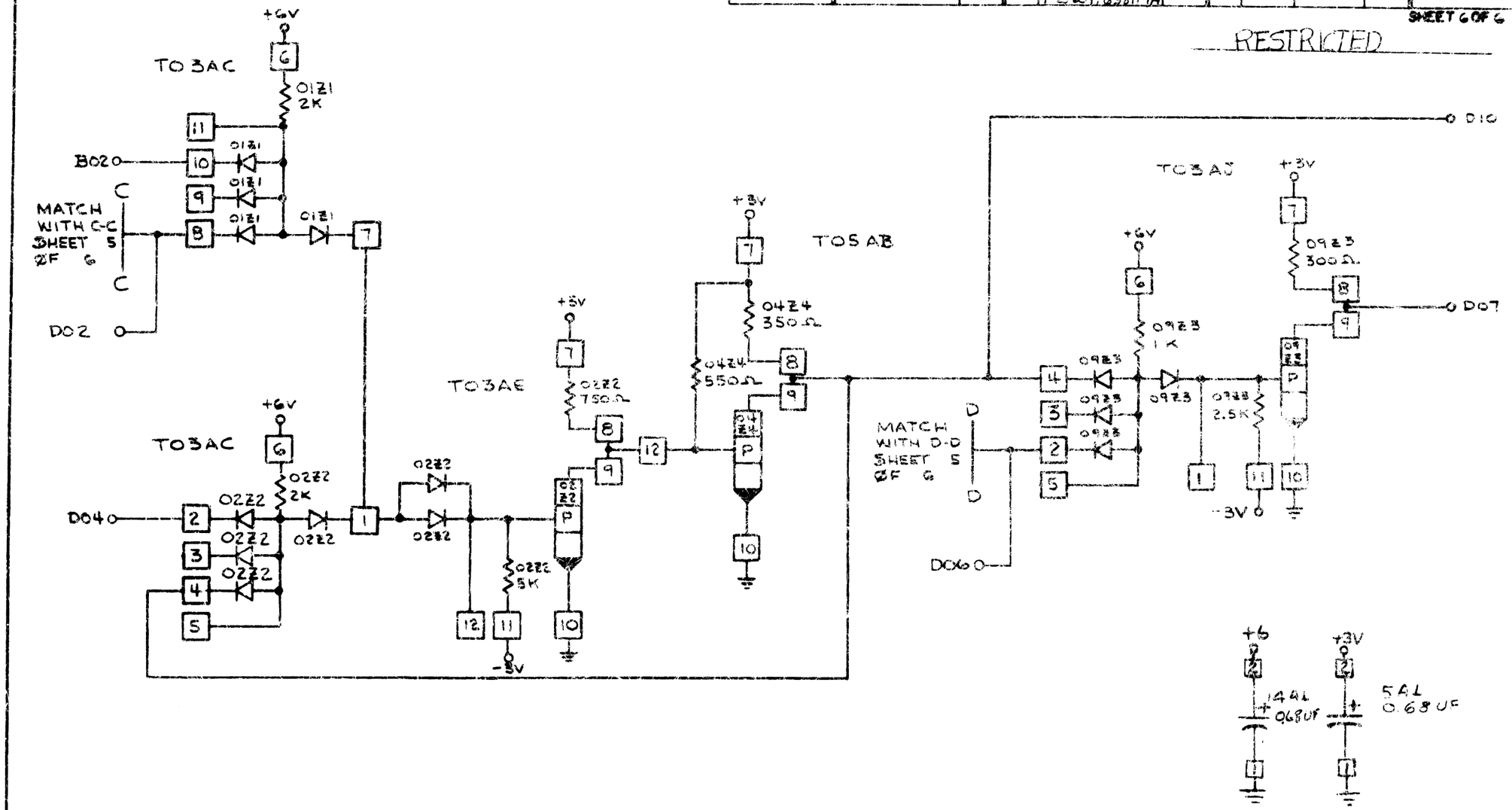

INTERNATIONAL BUSINESS MACHINES CORP				
NAME	CARD ASM — POWER LATCH			
DESIGN	ADC	2-16-65	TYPE	2044
DETAIL	ADC	2-16-65	SCALE	NONE
CHECK	ADC	2-17-65	DRAWN	
APPRO	GHM	2-16-65	CHECK	10) 22265

C 5803045