STANDARDS CODE 2-7045

5803050

CARD CODE 5803050

SHEET 4 OF 4

RESTRICTED

SHEET 4 OF 4

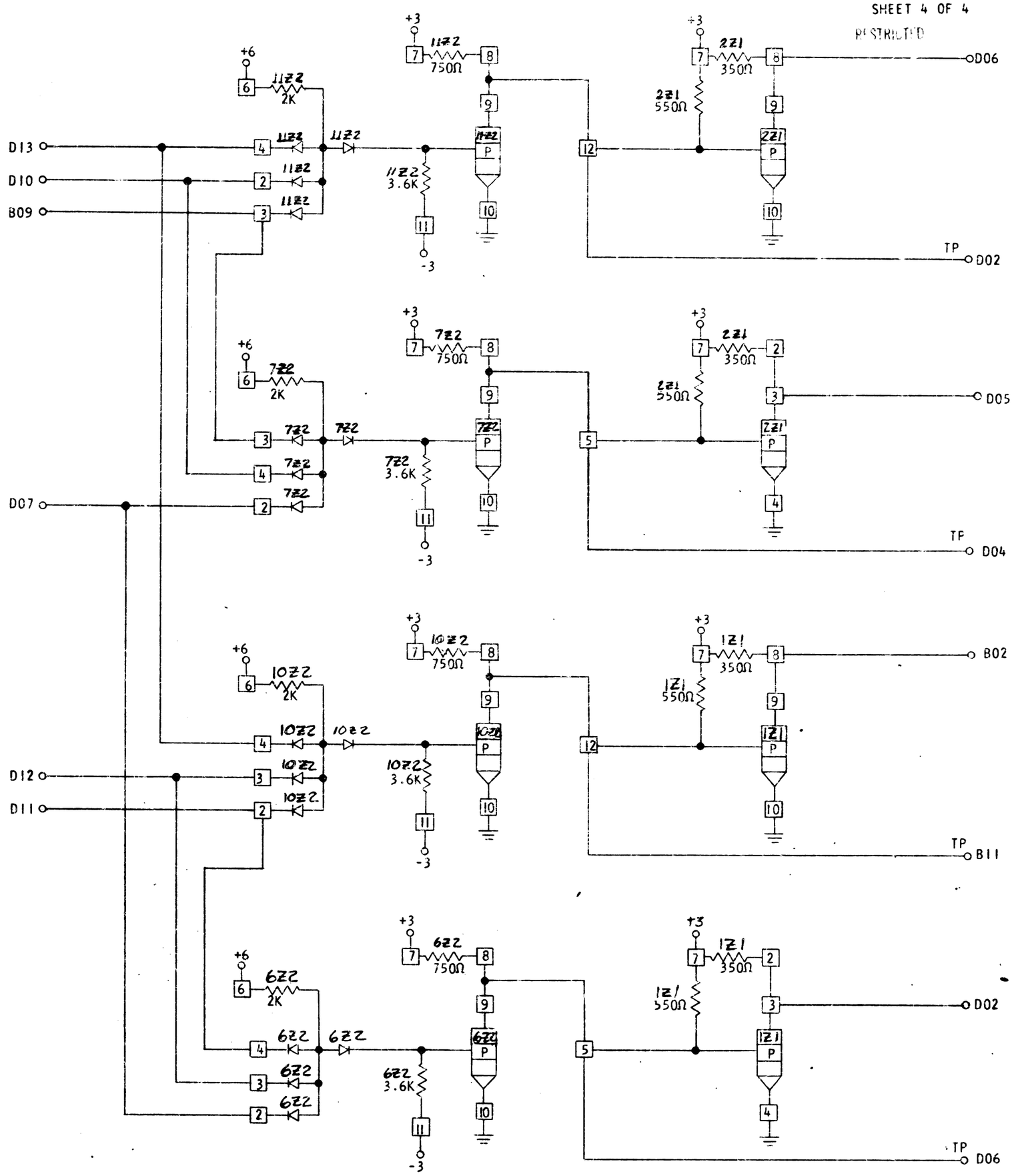

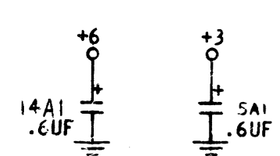

CIRCUIT AND PACKAGING STANDARD	
APPROVAL	DATE

INTERNATIONAL BUSINESS MACHINES CORP.				DATE	CHANGE NO.	APPROVAL	DATE	CHANGE NO.	APPROVAL	DEVELOPMENT NO.	
NAME	CARD ASM-DECODER			10-14-63	DEV 1589					GL-1048	5803050
				1-24-65	161726						
DESIGN		MODEL	1430								
DETAIL		SCALE	NONE								
CHECK		DRAW	VMDI-27-65								
APPRO		CHECK									

C