5803051

STANDARD CODE 2 FOR 6

CARD CODE 3051 | 5803051

SHEET 4 OF 4

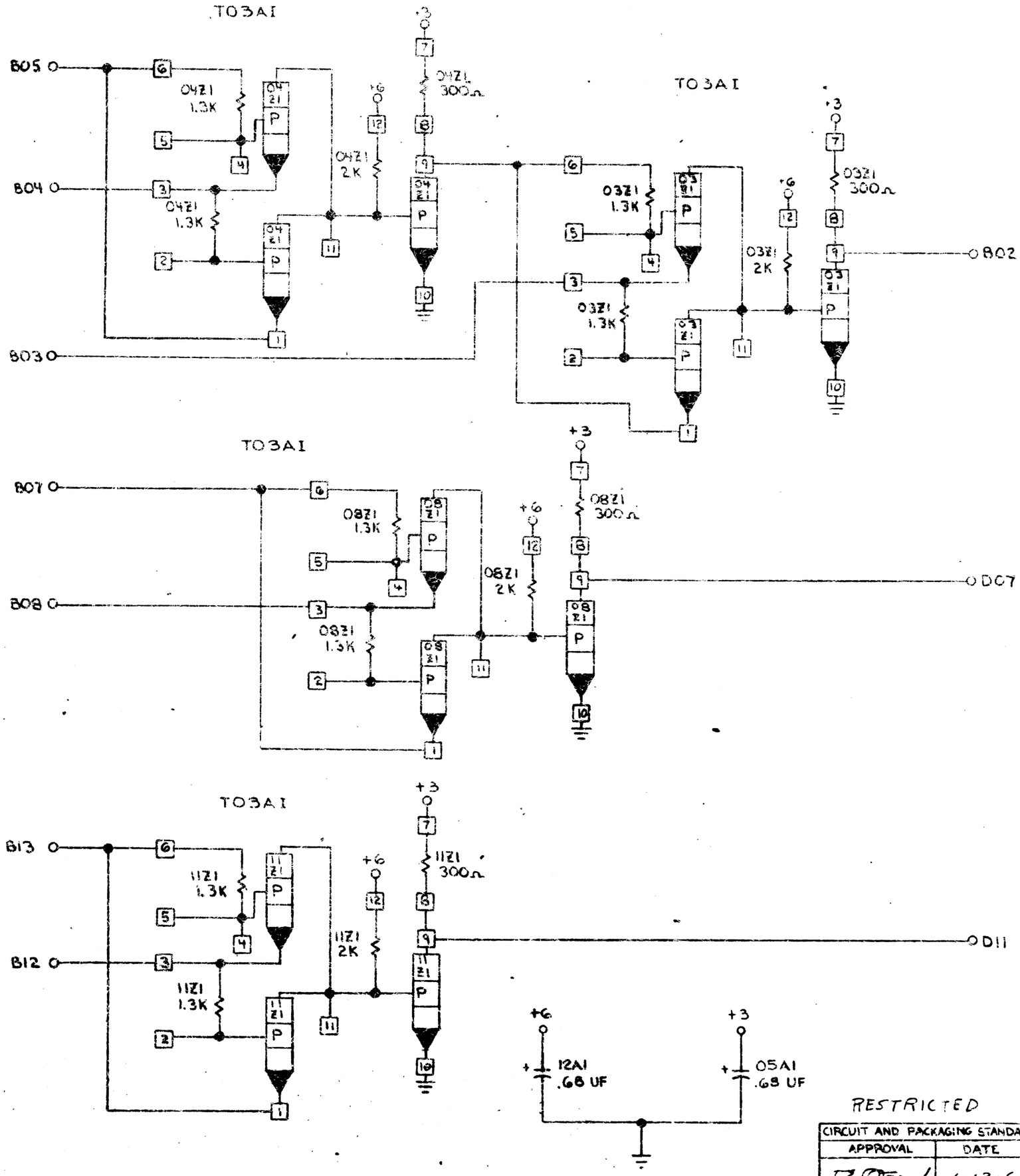

RESTRICTED

CIRCUIT AND PACKAGING STANDARD	
APPROVAL	DATE
J.E. Otrand	1-13-65

INTERNATIONAL BUSINESS MACHINES CORP.											
NAME CARD ASM - PARITY CHECKER					DATE	CHANGE NO.	DATE	CHANGE NO.	NOTE X PRINT TO ENG. SPEC. NO.	DEVELOPMENT NO.	
DESIGN	NLS	12-21-64	MODEL	2250-1	10-14-63	DEV. 1589				GL-1052	051
DETAIL	NLS	12-21-64			1-28-64	DEV. 2291					
CHECK	PSS	1-12-65	DRAW	NLS 12-21-64	1-26-65	162195					
APPRO	JES	1-13-65	CHECK								