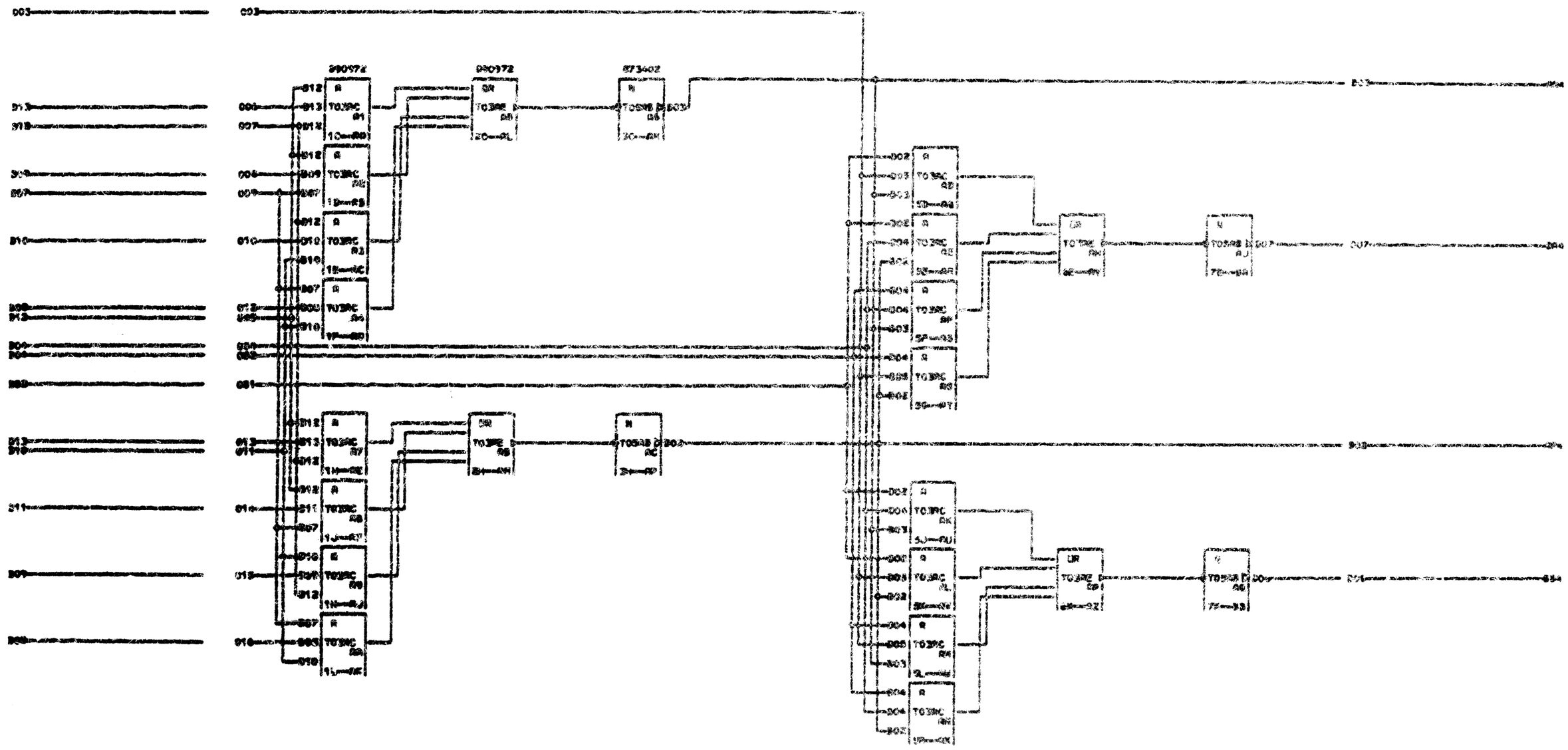

CARD (SIZE) 1-12 INC
SPECIAL RESTRICTIONS

SHEET 1 OF 3

RESTRICTED

SHERE ADDER
DATE
LTR