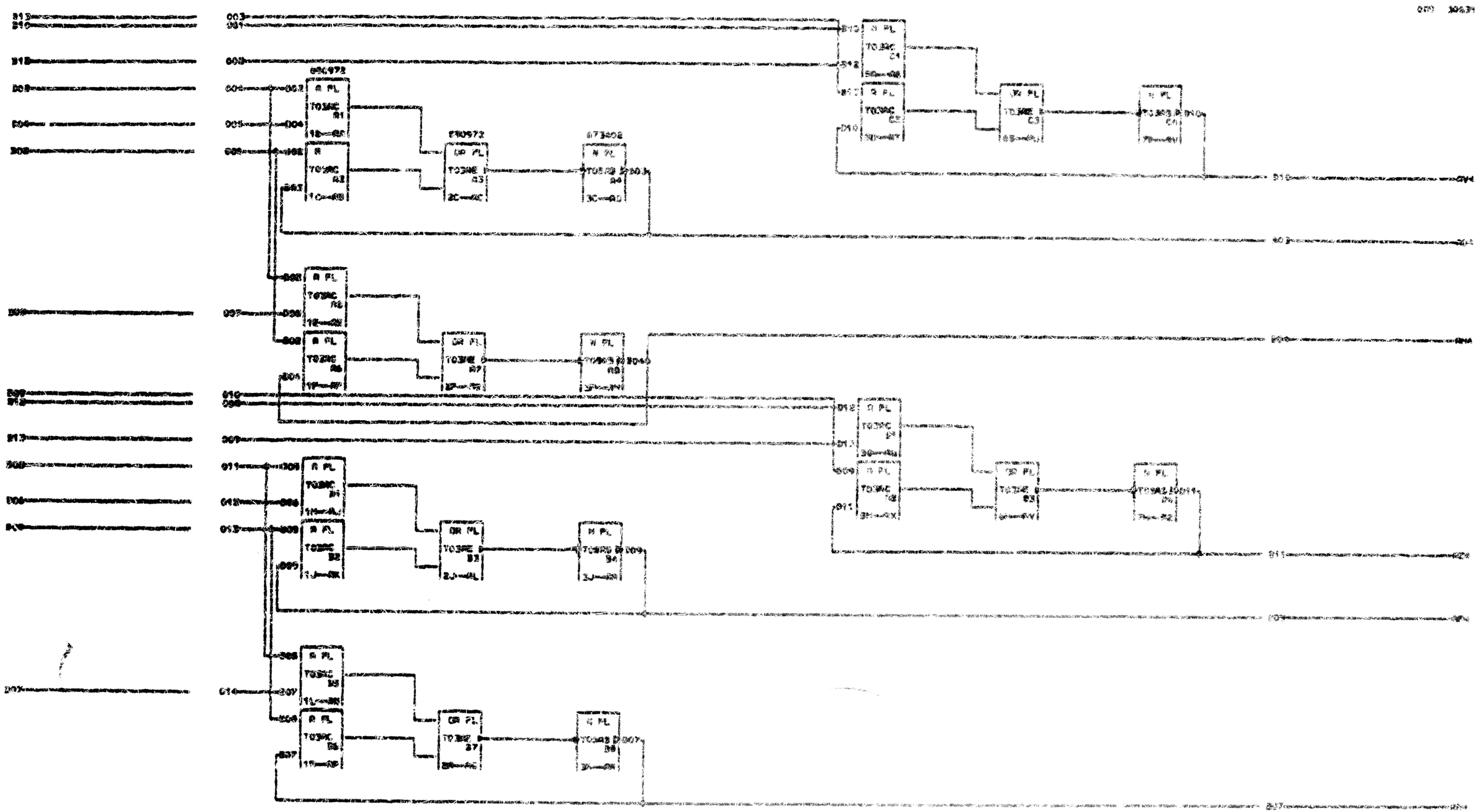

RESTRICTED

SINGLE WY LATCH

SHEET 1 OF 3