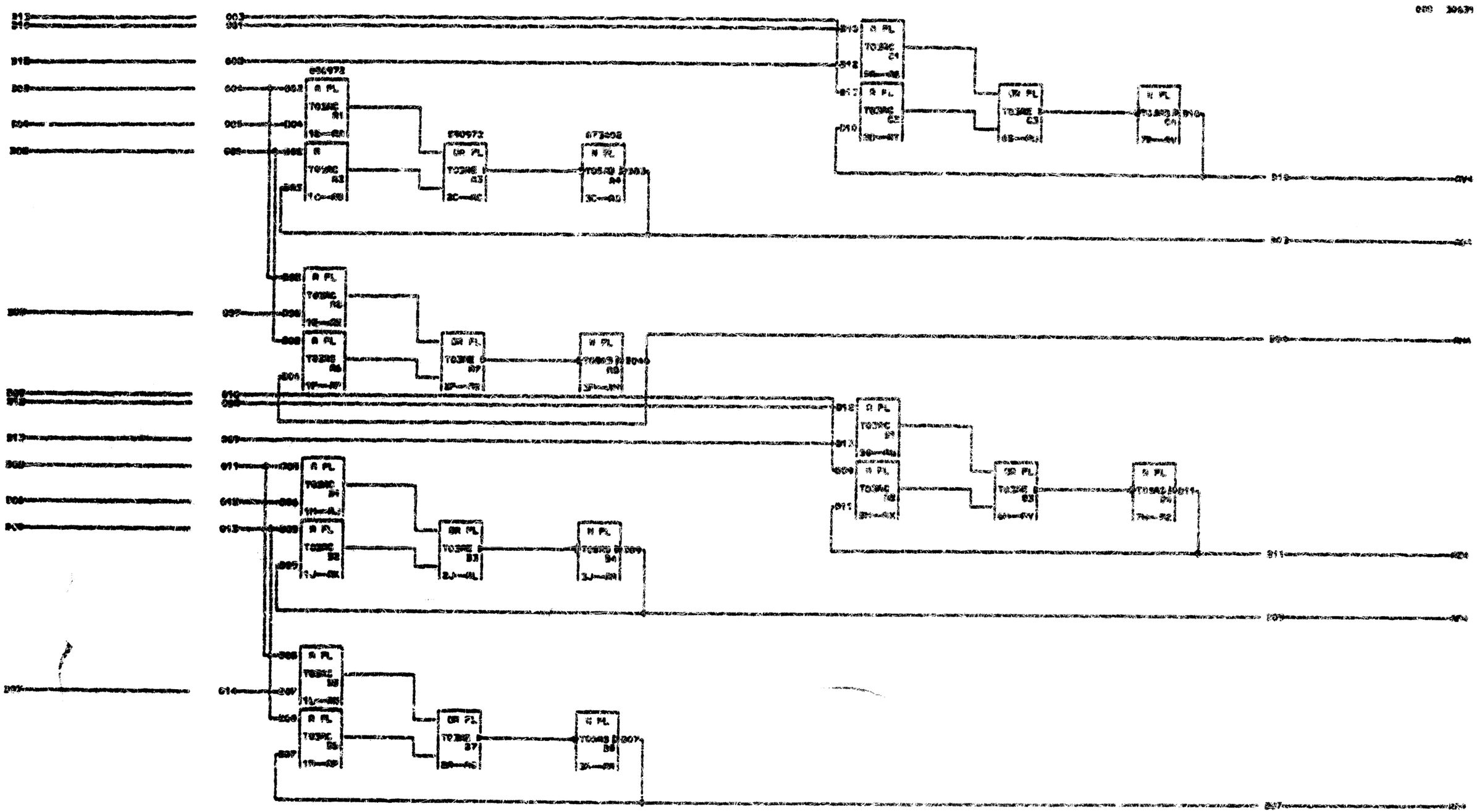

RESTRICTED

SHEET 1 OF 3