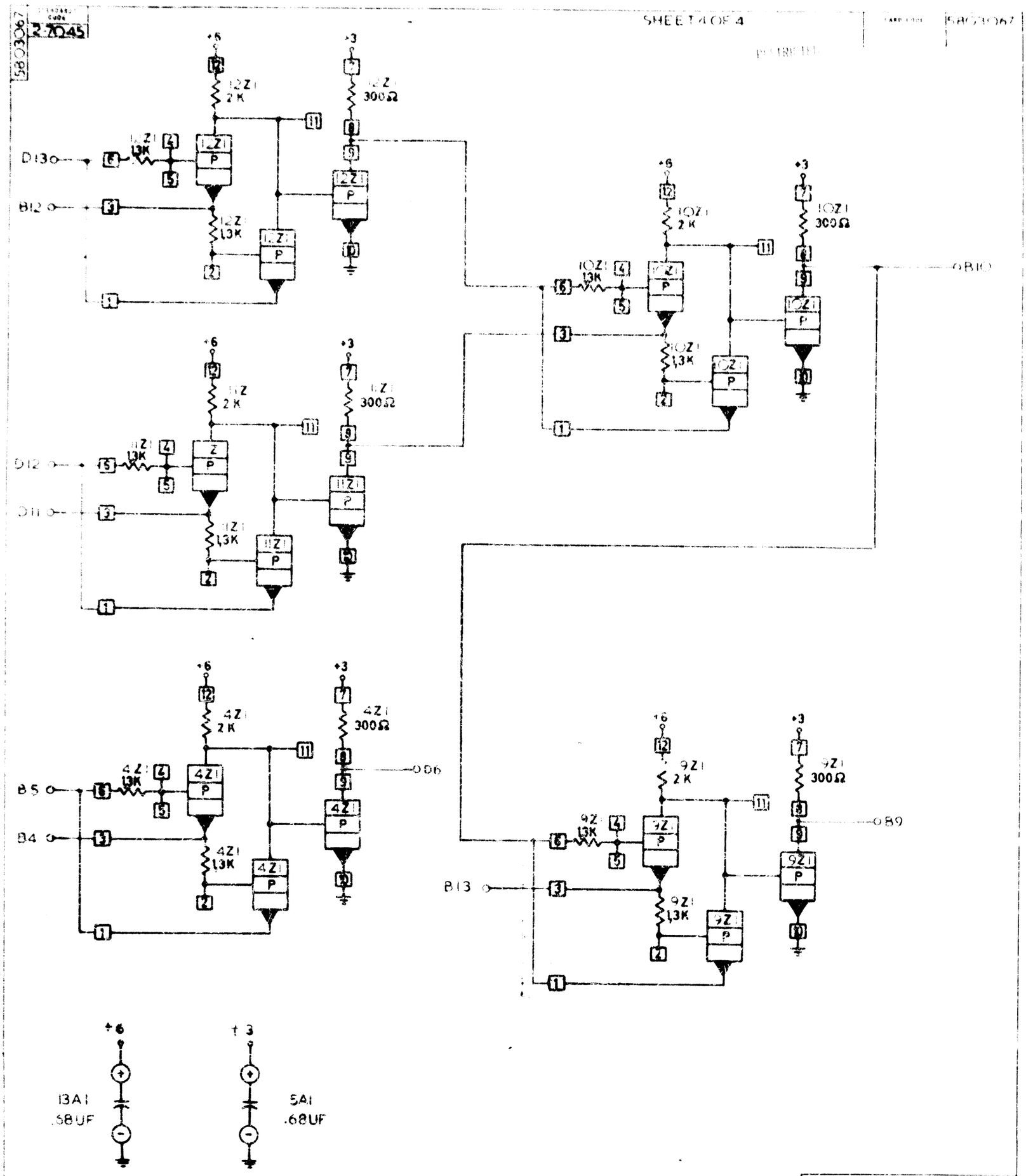

CIRCUIT AND PACKAGING STANDARD	
APPROVAL	DATE

INTERNATIONAL BUSINESS MACHINES CORP	DATE	CHANGE NO	APPROVAL	DATE	CHANGE NO	APPROVAL	DEVELOPMENT NO
NAME CARD ASSY 3-4W & 2-2W XOR	9.12.64	SC 0123					~~21-0701~~
DESIGN RTJ 8.11.64 MODEL S-T	2.25.64	EC 160422					
DETAIL DA SCALE NONE	9.18.64	EC 161903					
CHECK DRAW							
APPRO CHECK							

5803067

C