STANDARDS CODE 2-7045

5803078

SHEET 3 OF 4

CARD CODE 5803078

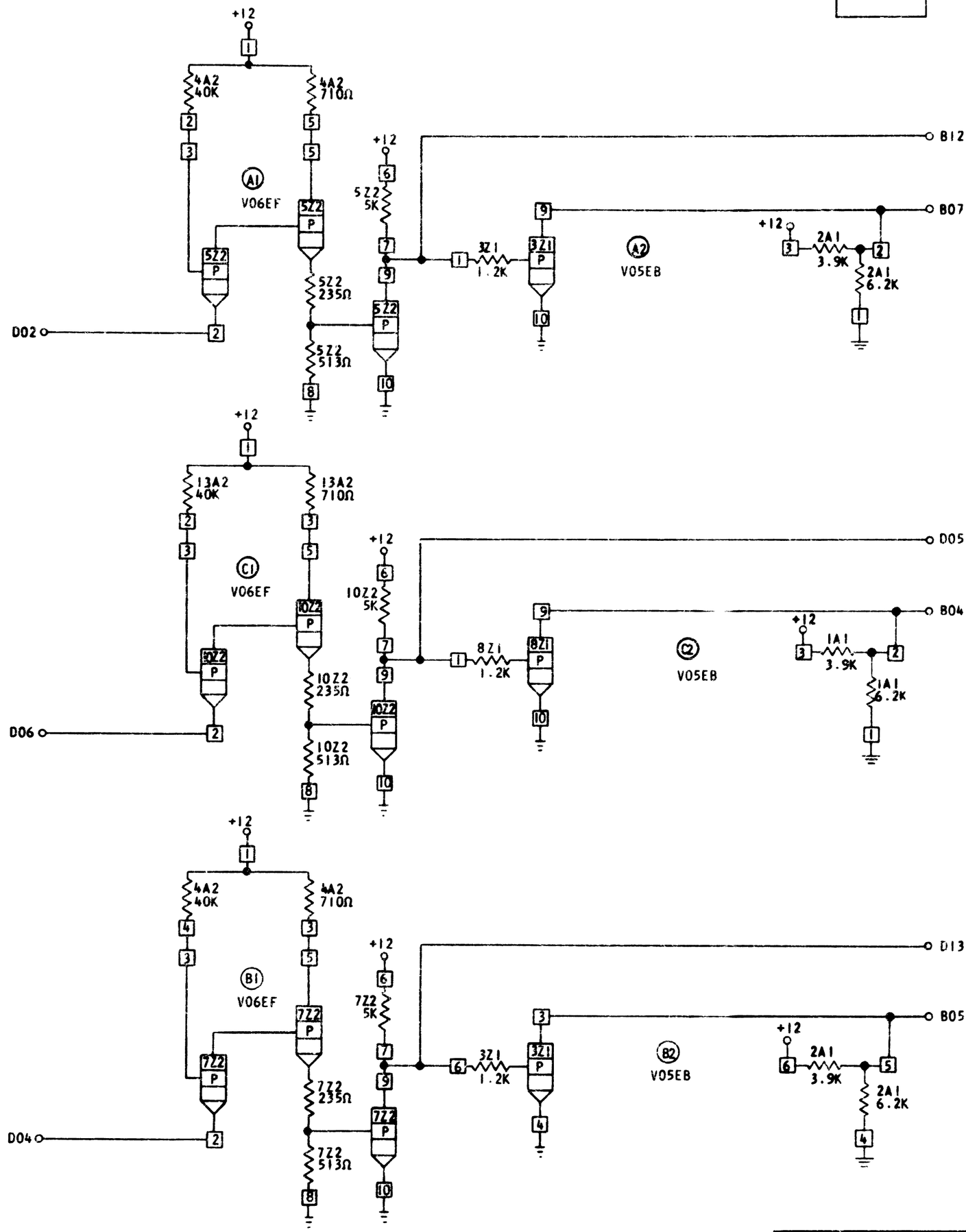


| CIRCUIT AND PACKAGING STANDARD | |
|---|---|
| APPROVAL | DATE |
| | |

| INTERNATIONAL BUSINESS MACHINES CORP. | DATE | CHANGE NO. | APPROVAL | DATE | CHANGE NO. | APPROVAL | DEVELOPMENT NO. |
|---|---|---|---|---|---|---|---|
| NAME 6 HLP MULTIPLEX LINE RCV. | 1-15-64 | DEV 2343 | | | | | |
| 6 HI SPEED INV. #1 TERMINATOR | 5-8-64 | 160088 | | | | | |
| DESIGN MCK 11-14-63 MODEL | 6/8/64 | 160724 | | | | | |
| DETAIL JMR 11-14-63 SCALE NONE | 3-16-65 | 163715 C | | | | | |
| CHECK PEH 11-21-63 DRAW MDE 12-18-63 | 25AUG67 | 172000 D | | | | | |
| APPRO [illegible] CHECK MAS 12-27-63 | | | | | | | |

5803078

C