5803080

2-7045

CARD CODE 5803080

SHEET 3 OF 3

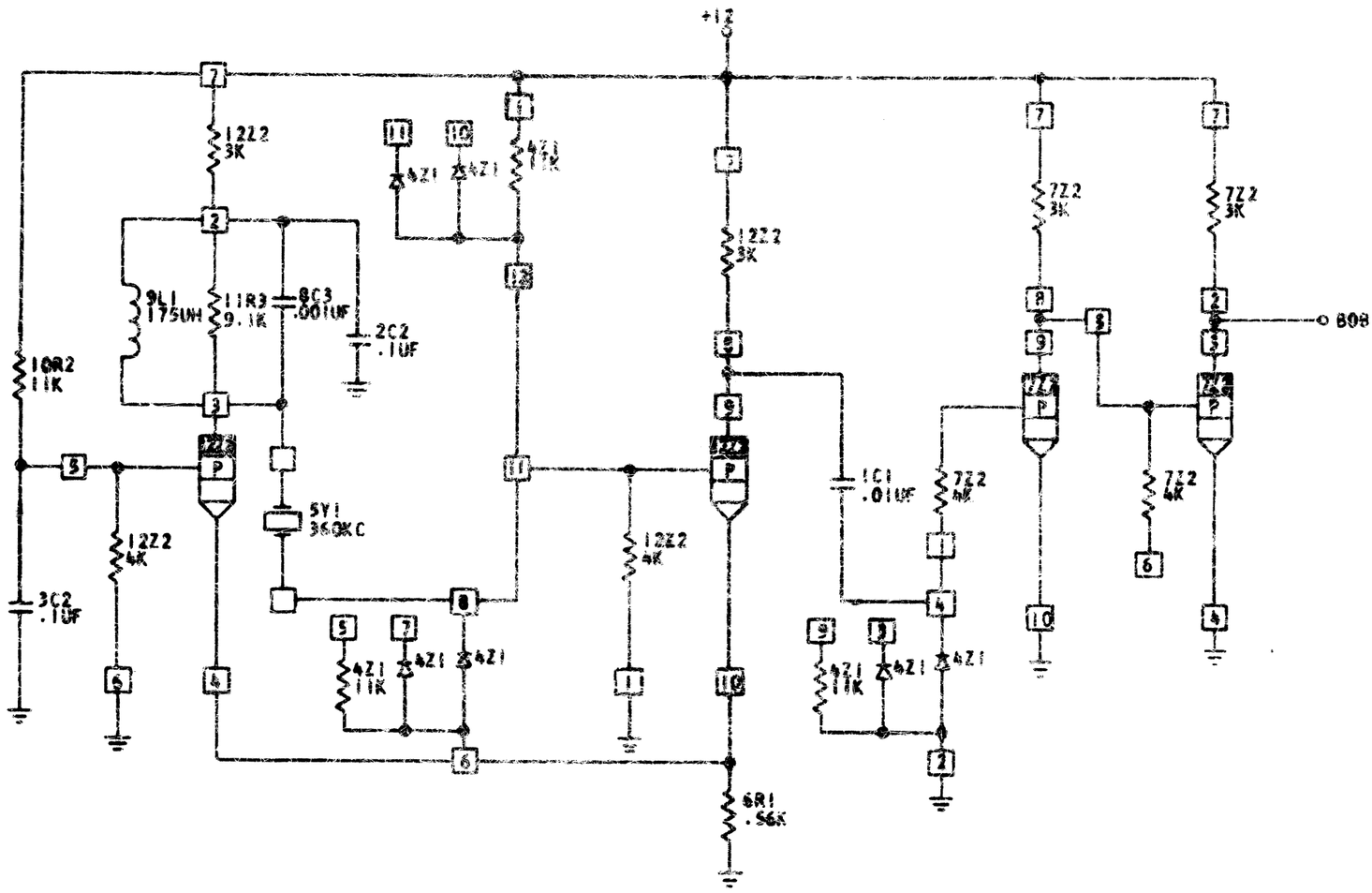

NOTE:
ALL RESISTORS 1/4W ±5%

CIRCUIT AND PACKAGING STANDARD	
APPROVAL	DATE

DATE	CHANGE NO.	APPROVAL	DATE	CHANGE NO.	APPROVAL	DEVELOPMENT NO.
8-2-66	169913					

C