5803083

STANDARDS CODE 2-7045

CARD CODE 5803083

SHEET 3 OF 4

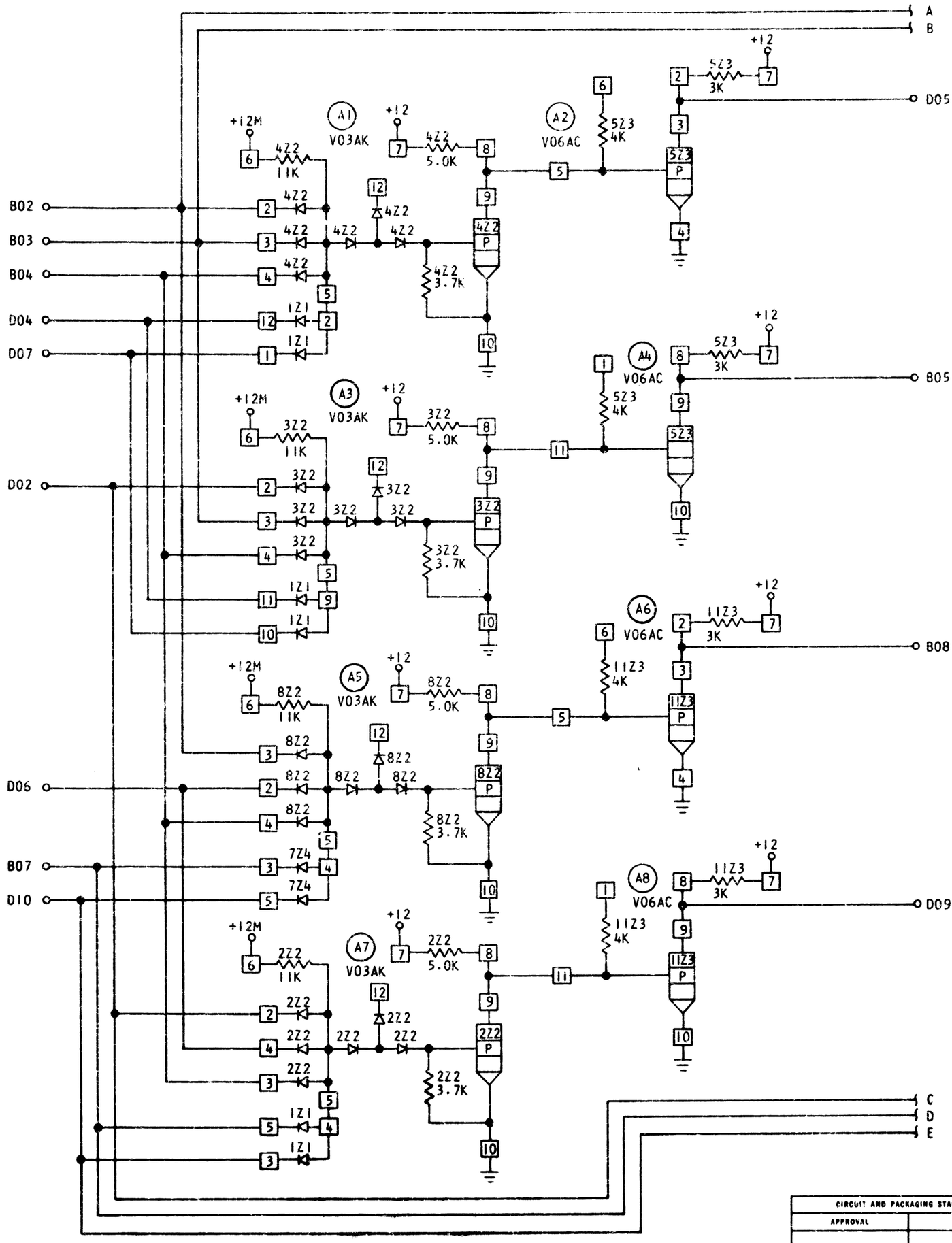

CIRCUIT AND PACKAGING STANDARD	
APPROVAL	DATE

INTERNATIONAL BUSINESS MACHINES CORP.					DATE	CHANGE NO	APPROVAL	DATE	CHANGE NO.	APPROVAL	DEVELOPMENT NO.	5803083
NAME	HAMMER ADDRESS AND RESET				3-31-64	160004	A					
DESIGN		MODEL			20SEP67	172002	B					
DETAIL		SCALE	NONE									
CHECK		DRAW										
APPRO		CHECK										

C