STANDARDS CODE 2-7045

5803084

RESTRICTED

CARD CODE 5803084

SHEET 4 OF 4

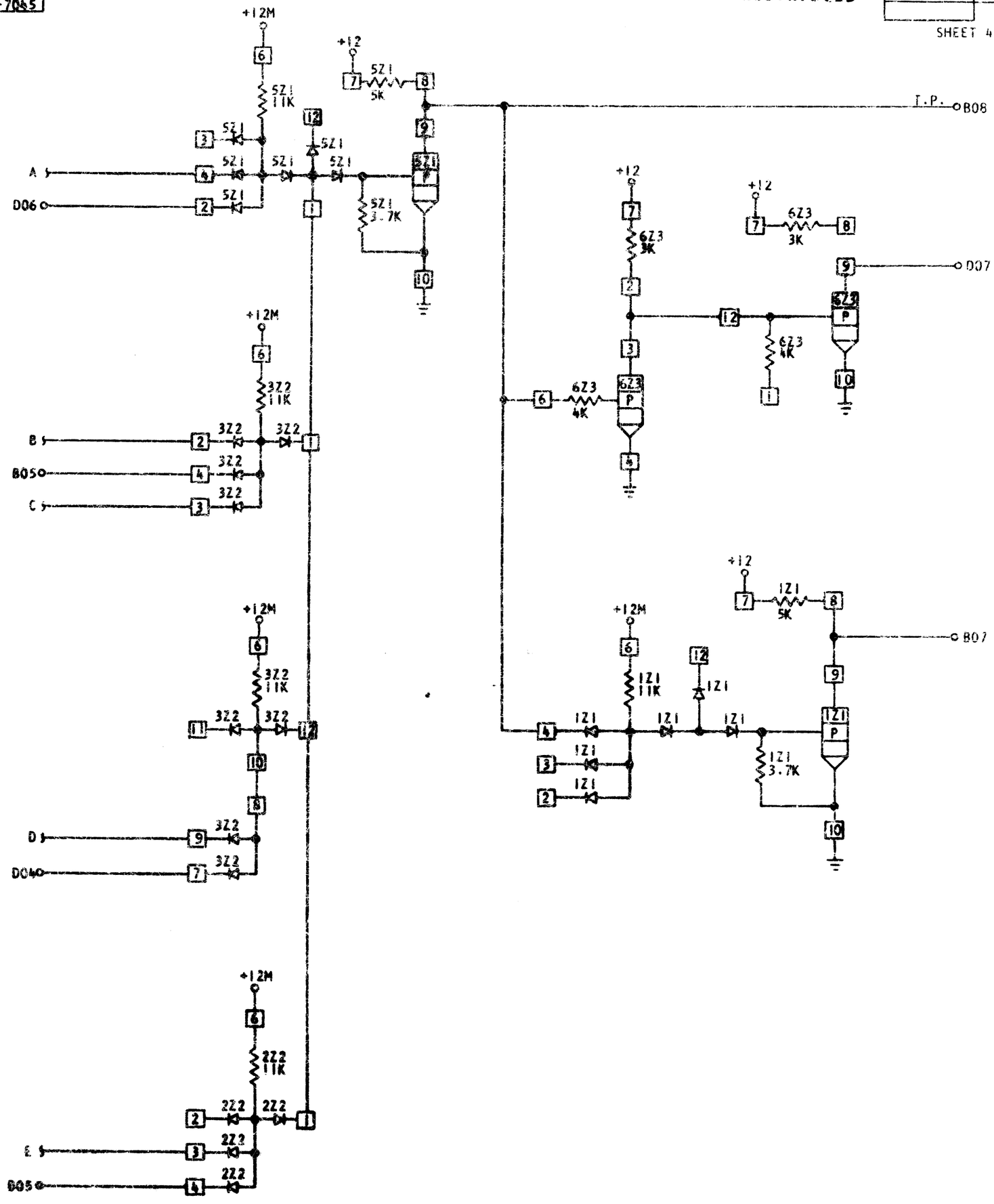

CIRCUIT AND PACKAGING STANDARD	
APPROVAL	DATE

DATE	CHANGE NO.	APPROVAL	DATE	CHANGE NO.	APPROVAL	DEVELOPMENT NO.
2-31-64	160009					SE406A

5803084

C